ZI5 SYSTEM BLOCK DIAGRAM

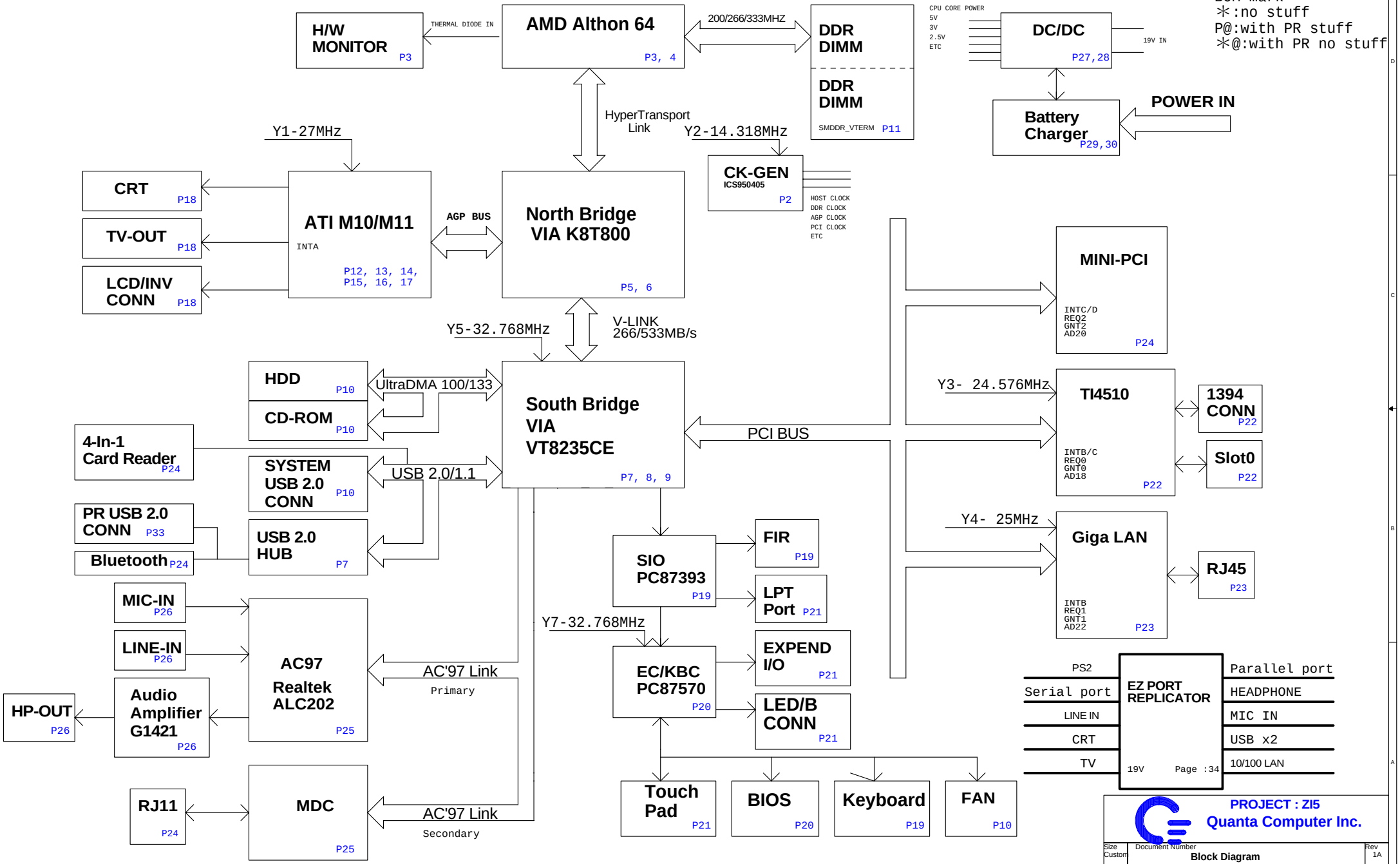

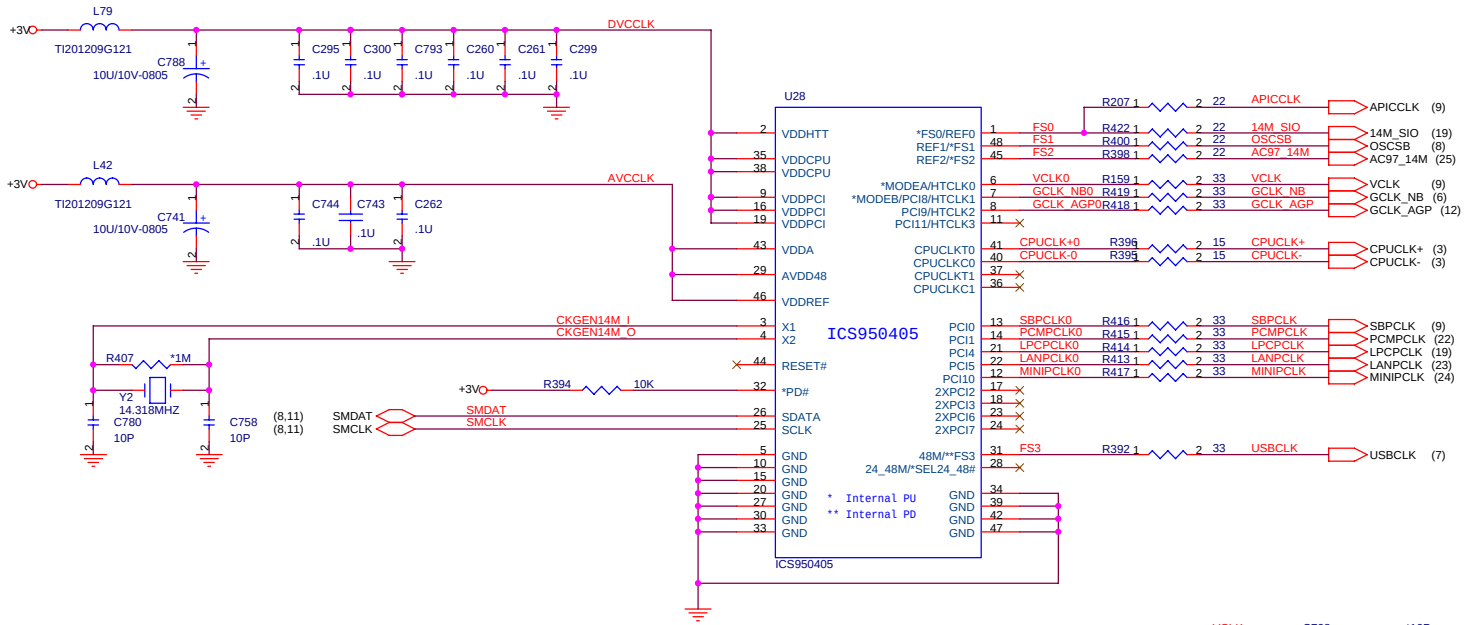

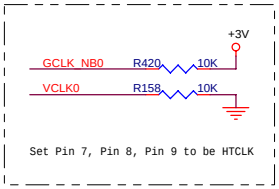

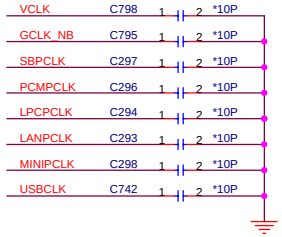

FS3	FS2	FS1	FS0	CPUCLK MHZ	HTT MHZ	PCICLK MHZ
0	0	0	0	100.90	67.27	33.63
0	0	0	1	133.90	66.95	33.48
0	0	1	0	168.00	67.20	33.60
0	0	1	1	202.00	67.33	33.67
0	1	0	0	100.20	66.80	33.40
0	1	0	1	133.50	66.75	33.38
0	1	1	0	166.70	66.68	33.34
0	1	1	1	200.40	66.80	33.40
1	0	0	0	150.00	60.00	30.00
1	0	0	1	180.00	60.00	30.00
1	0	1	0	210.00	70.00	35.00
1	0	1	1	240.00	60.00	30.00
1	1	0	0	270.00	67.75	33.75
1	1	0	1	233.33	66.67	33.33
1	1	1	0	266.67	66.67	33.33
1	1	1	1	300.00	75.00	37.50

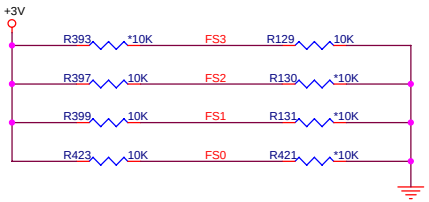

PROJECT : ZI5

Quanta Computer Inc.

Size	Document Number	Rev
Custom	CLOCK GENERATOR	1A

Date: Tuesday, September 14, 2004 Sheet 2 of 33

WWW.AliSaler.Com

CPU H.T/CTL I/F

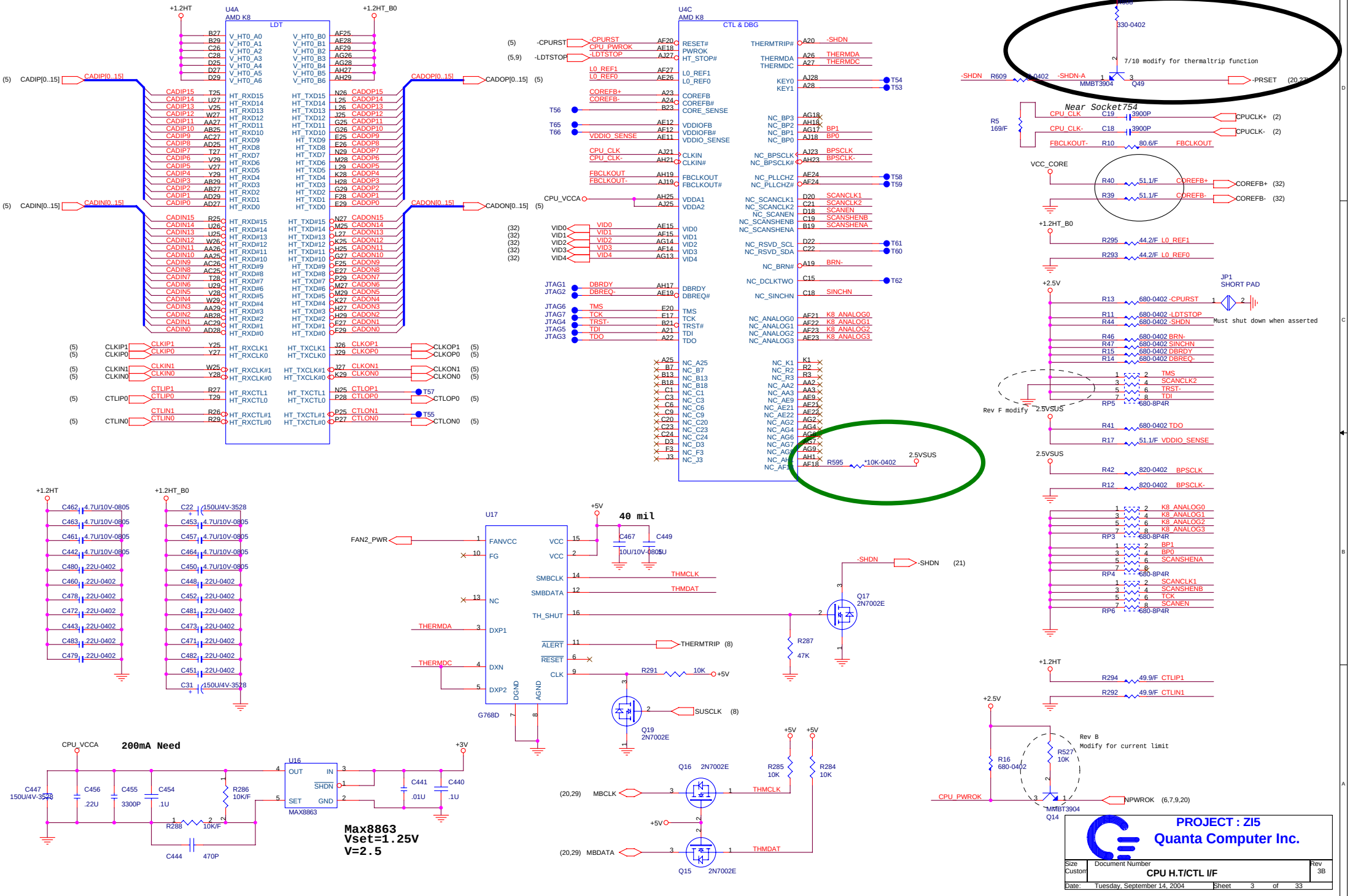

PROJECT : ZI5

Quanta Computer Inc.

Size	Document Number	Rev
Custom	CPU H.T/CTL I/F	3B

Date: Tuesday, September 14, 2004 Sheet 3 of 33

CPU DDR/POWER I/F

WWW.AliSaler.Com

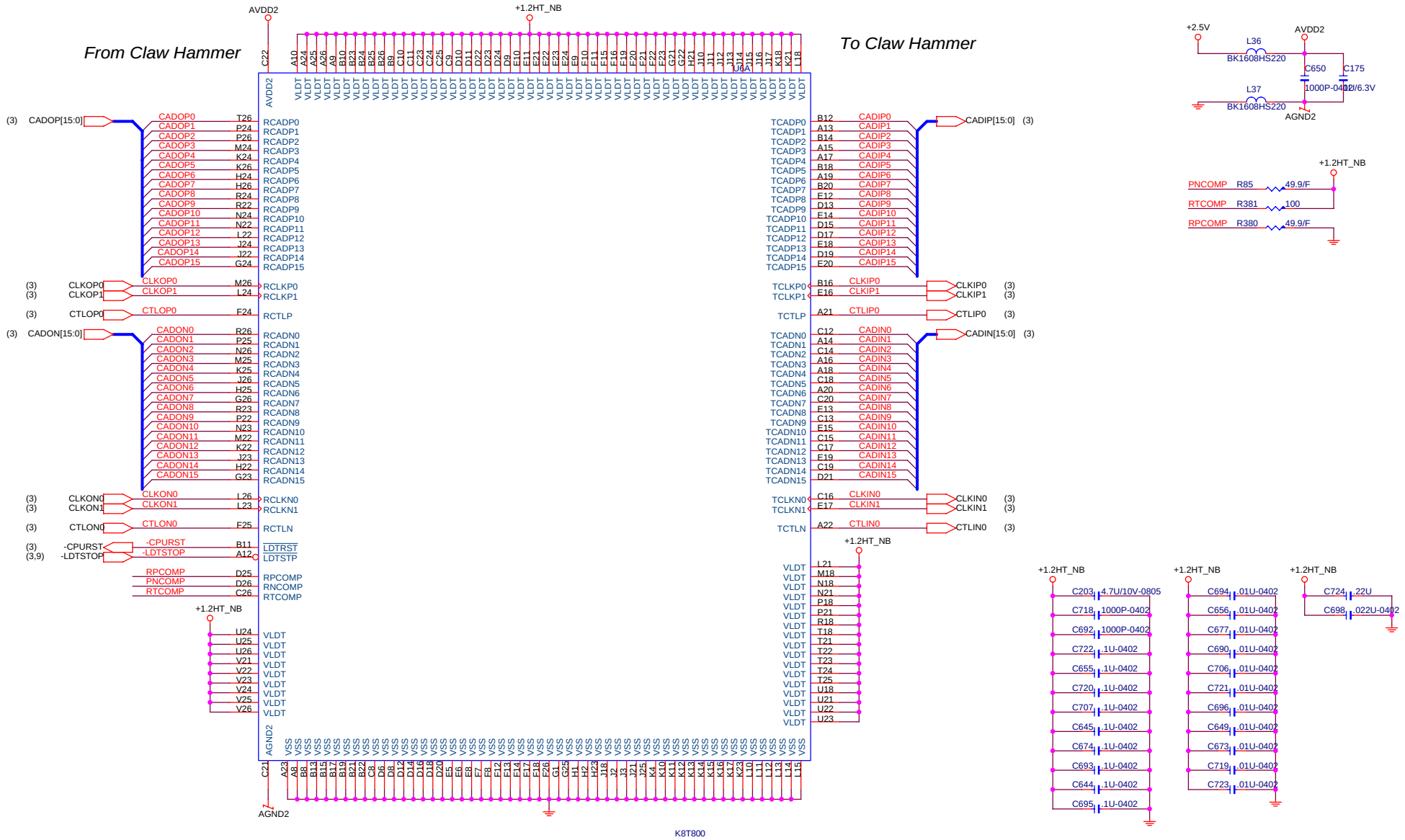

PROJECT : ZI5

Quanta Computer Inc.

Size	Document Number	Rev
C	K8T800 (HOST)	1A

Date: Tuesday, September 14, 2004 Sheet 5 of 33

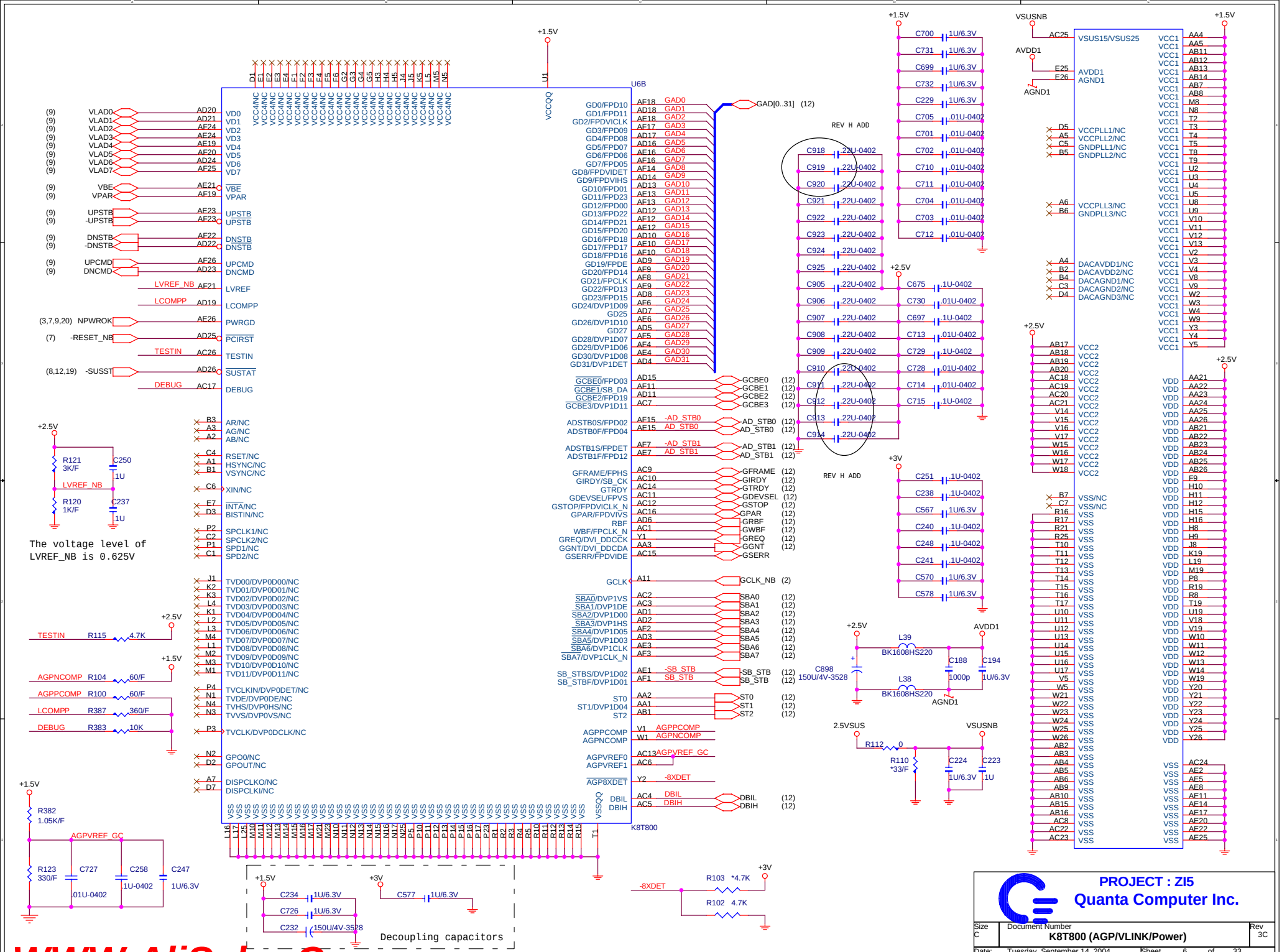

WWW.AliSaler.Com

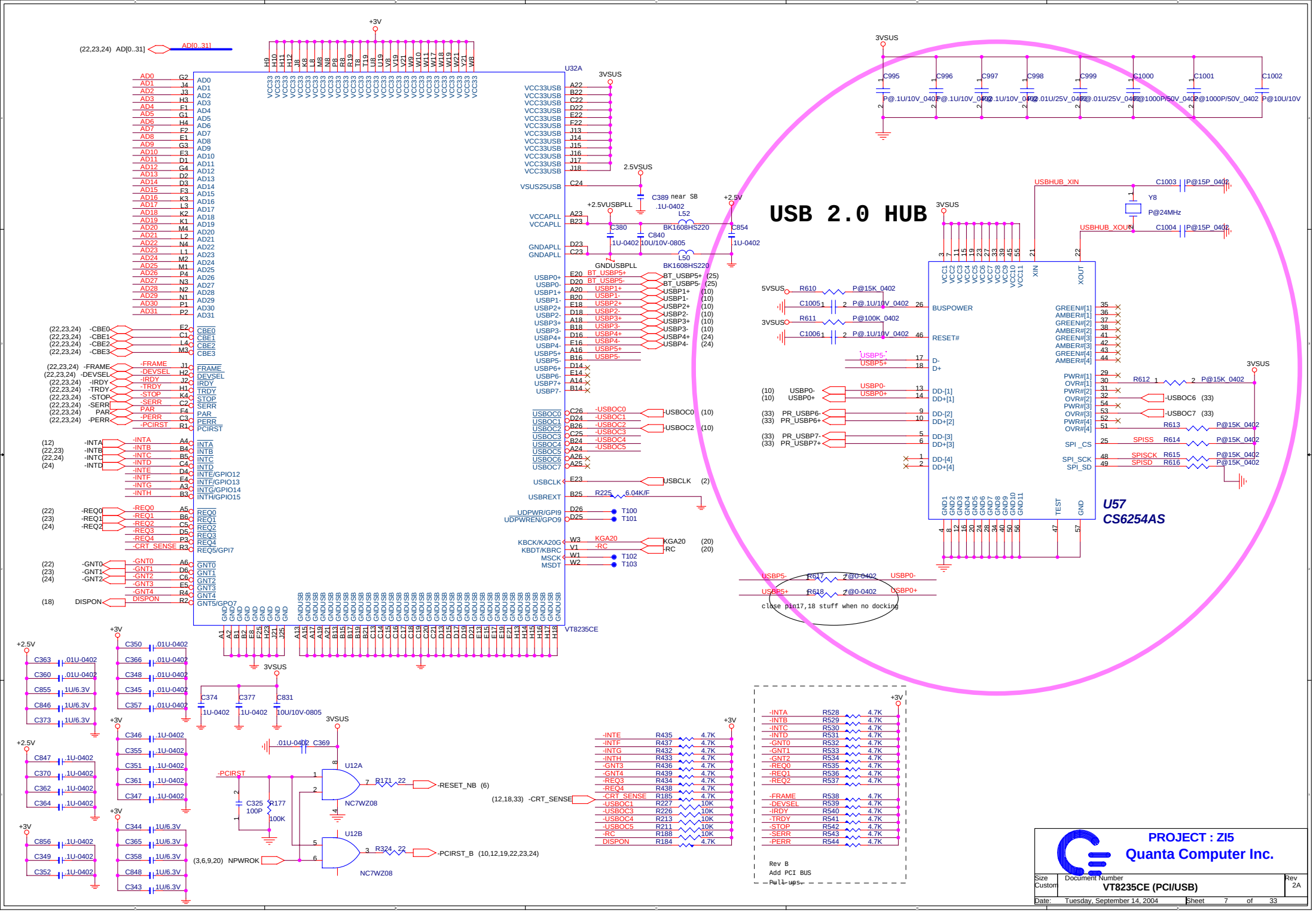
USB 2.0 HUB
U32A
VT8235CE
U57
CS6254AS
BUSPOWER
RESET#
XIN
XOUT
TEST
GND
close pin17,18 stuff when no docking
U12A
U12B
NC7WZ08
PROJECT : ZI5
Quanta Computer Inc.
Size
Custom
Document Number
VT8235CE (PCI/USB)
Rev
2A
Date: Tuesday, September 14, 2004
Sheet 7 of 33

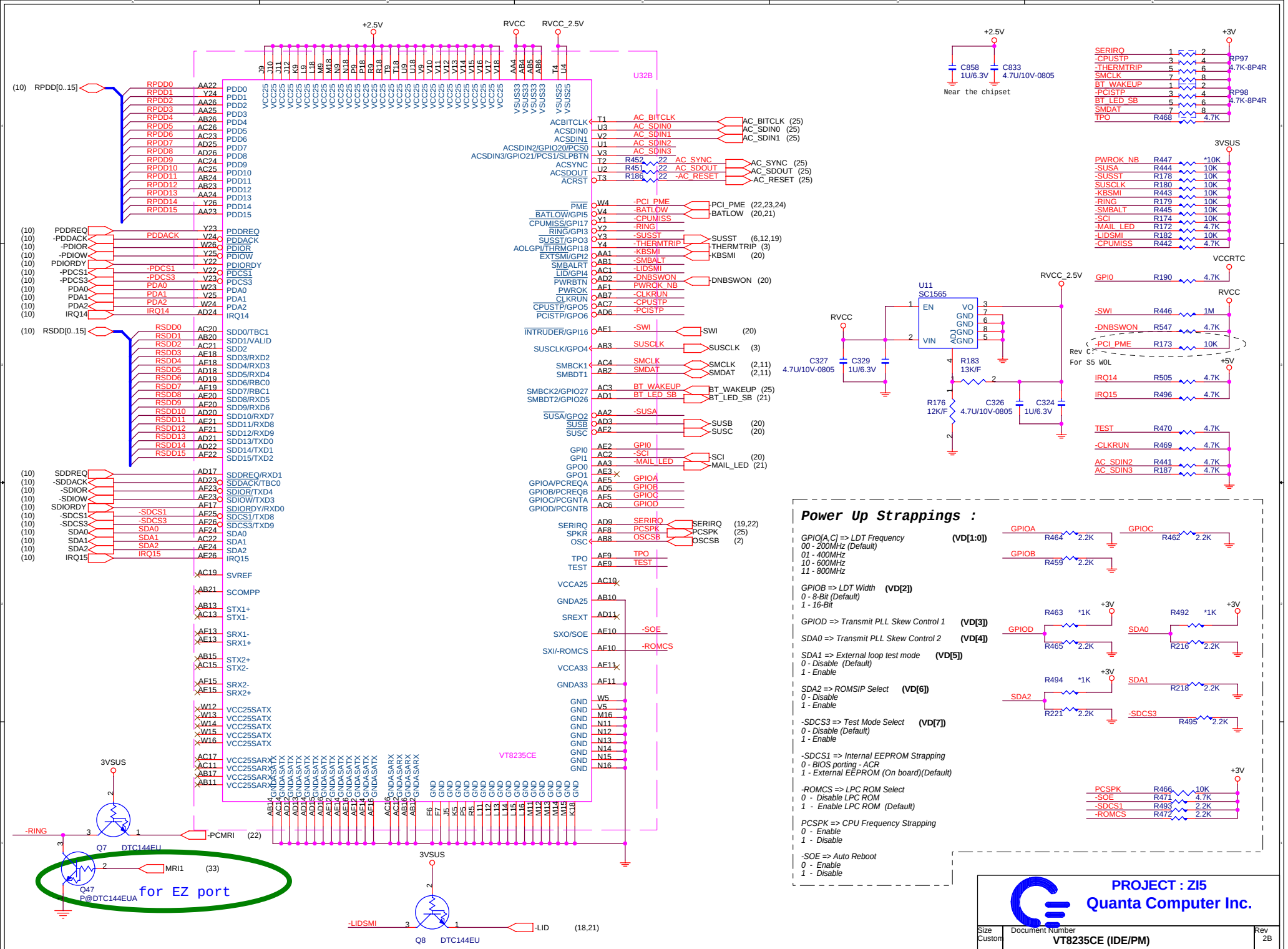

WWW.AliSaler.Com

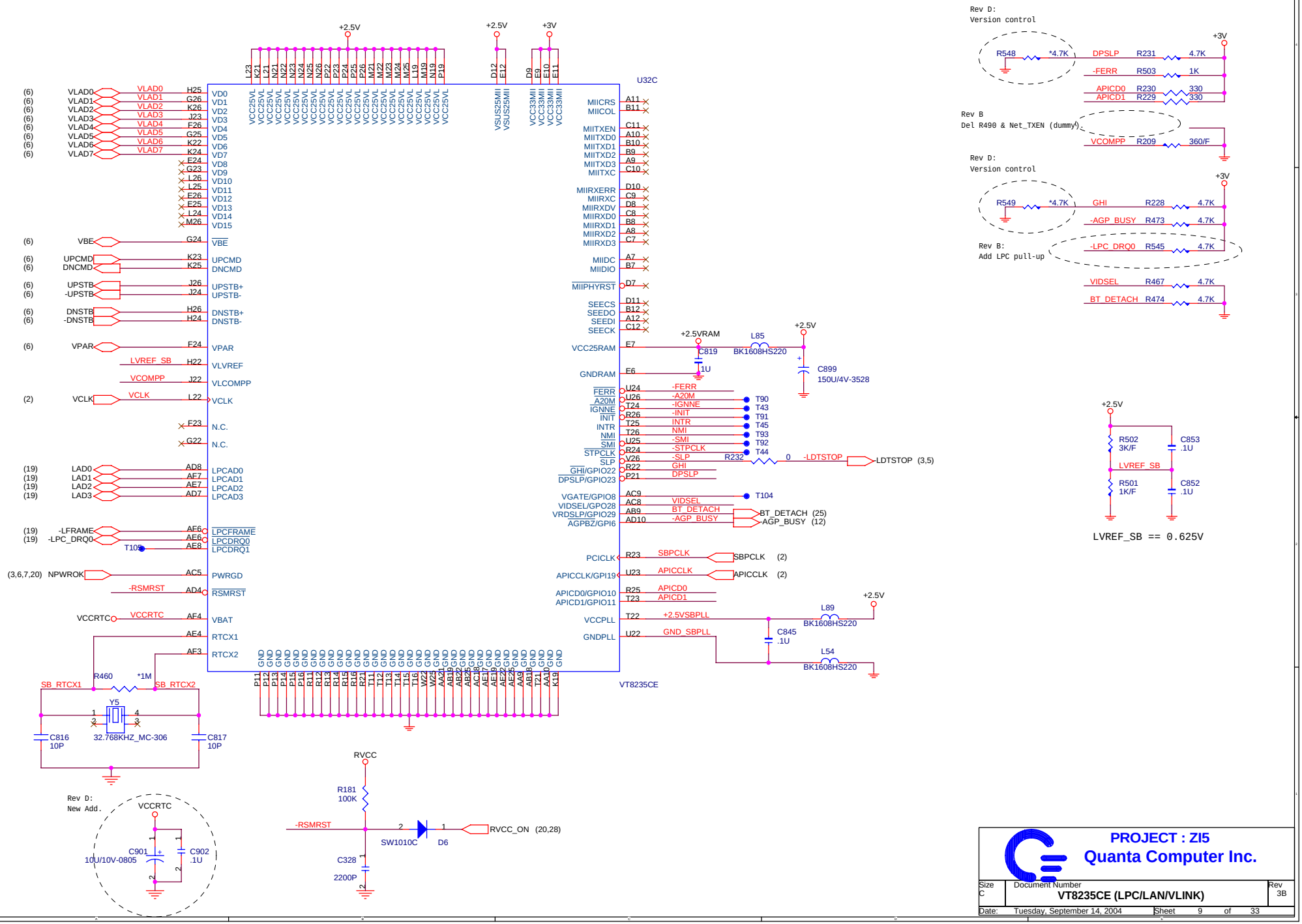
U32C
VT8235CE
+2.5V
+3V
VLAD0 H25 VD0
VLAD1 G26 VD1
VLAD2 K26 VD2
VLAD3 J23 VD3
VLAD4 F26 VD4
VLAD5 G25 VD5
VLAD6 K22 VD6
VLAD7 K24 VD7
E24 VD8
G23 VD9
L26 VD10
L25 VD11
E26 VD12
E25 VD13
L24 VD14
M26 VD15
VBE G24 VBE
UPCMD K23 UPCMD
DNCMD K25 DNCMD
UPSTB J26 UPSTB+
-UPSTB J24 UPSTB-
DNSTB H26 DNSTB+
-DNSTB H24 DNSTB-
VPAR F24 VPAR
LVREF_SB H22 VLVREF
VCOMPP J22 VLCOMPP
VCLK L22 VCLK
F23 N.C.
G22 N.C.
LAD0 AD8 LPCAD0
LAD1 AF7 LPCAD1
LAD2 AE7 LPCAD2
LAD3 AD7 LPCAD3
-LFRAME AF6 LPCFRAME
-LPC_DRQ0 AE6 LPCDRQ0
AE8 LPCDRQ1
NPWROK AC5 PWRGD
-RSMRST AD4 RSMRST
VCCRTC AF4 VBAT
AF4 RTCX1
AF3 RTCX2
MIICRS A11
MIICOL B11
MIITXEN C11
MIITXD0 A10
MIITXD1 B10
MIITXD2 B9
MIITXD3 A9
MIITXC C10
MIIRXERR D10
MIIRXC C9
MIIRXDV D8
MIIRXD0 C8
MIIRXD1 B8
MIIRXD2 A8
MIIRXD3 C7
MIIDC A7
MIIDIO B7
MIIPHYRST D7
SEECS D11
SEEDO B12
SEEDI A12
SEECK C12
VCC25RAM E7
GNDRAM E6
FERR U24 -FERR
A20M U26 -A20M
IGNNE T24 -IGNNE
INIT R26 -INIT
INTR T25 INTR
NMI T26 NMI
SMI U25 -SMI
STPCLK R24 -STPCLK
SLP V26 -SLP
GHI/GPIO22 R22 GHI
DPSLP/GPIO23 P21 DPSLP
VGATE/GPIO8 AC9
VIDSEL/GPO28 AC8 VIDSEL
VRDSLP/GPIO29 AB9 BT_DETACH
AGPBZ/GPI6 AD10 -AGP_BUSY
PCICLK R23 SBPCLK
APICCLK/GPI19 U23 APICCLK
APICD0/GPIO10 R25 APICD0
APICD1/GPIO11 T23 APICD1
VCCPLL T22 +2.5VSBPLL
GNDPLL U22 GND_SBPLL
+2.5VRAM
C819 1U
L85 BK1608HS220
C899 150U/4V-3528
R232 0 -LDTSTOP
LDTSTOP (3,5)
BT_DETACH (25)
-AGP_BUSY (12)
SBPCLK (2)
APICCLK (2)
L89 BK1608HS220
C845 .1U
L54 BK1608HS220
SB_RTCX1
R460 *1M
SB_RTCX2
Y5
32.768KHZ_MC-306
C816 10P
C817 10P
Rev D:
New Add.
VCCRTC
C901 10U/10V-0805
C902 .1U
RVCC
R181 100K
-RSMRST
SW1010C D6
RVCC_ON (20,28)
C328 2200P
Rev D:
Version control
R548 *4.7K
DPSLP R231 4.7K
-FERR R503 1K
APICD0 R230 330
APICD1 R229 330
Rev B
Del R490 & Net_TXEN (dummy)
VCOMPP R209 360/F
Rev D:
Version control
R549 *4.7K
GHI R228 4.7K
-AGP_BUSY R473 4.7K
Rev B:
Add LPC pull-up
-LPC_DRQ0 R545 4.7K
VIDSEL R467 4.7K
BT_DETACH R474 4.7K
R502 3K/F
C853 .1U
LVREF_SB
R501 1K/F
C852 .1U
LVREF_SB == 0.625V
PROJECT : ZI5
Quanta Computer Inc.
Size C
Document Number
VT8235CE (LPC/LAN/VLINK)
Rev 3B
Date: Tuesday, September 14, 2004
Sheet 9 of 33

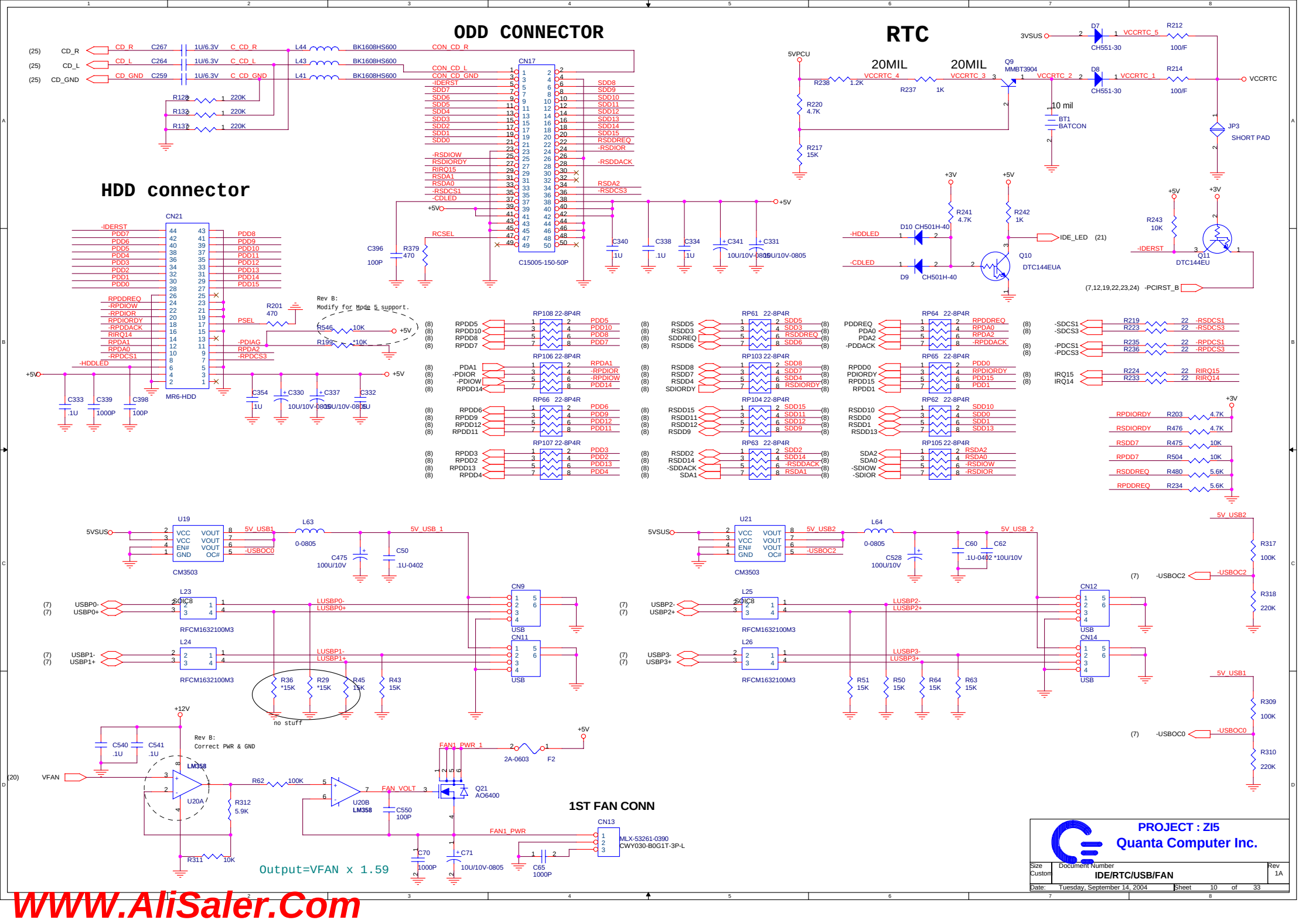

WWW.AliSaler.Com

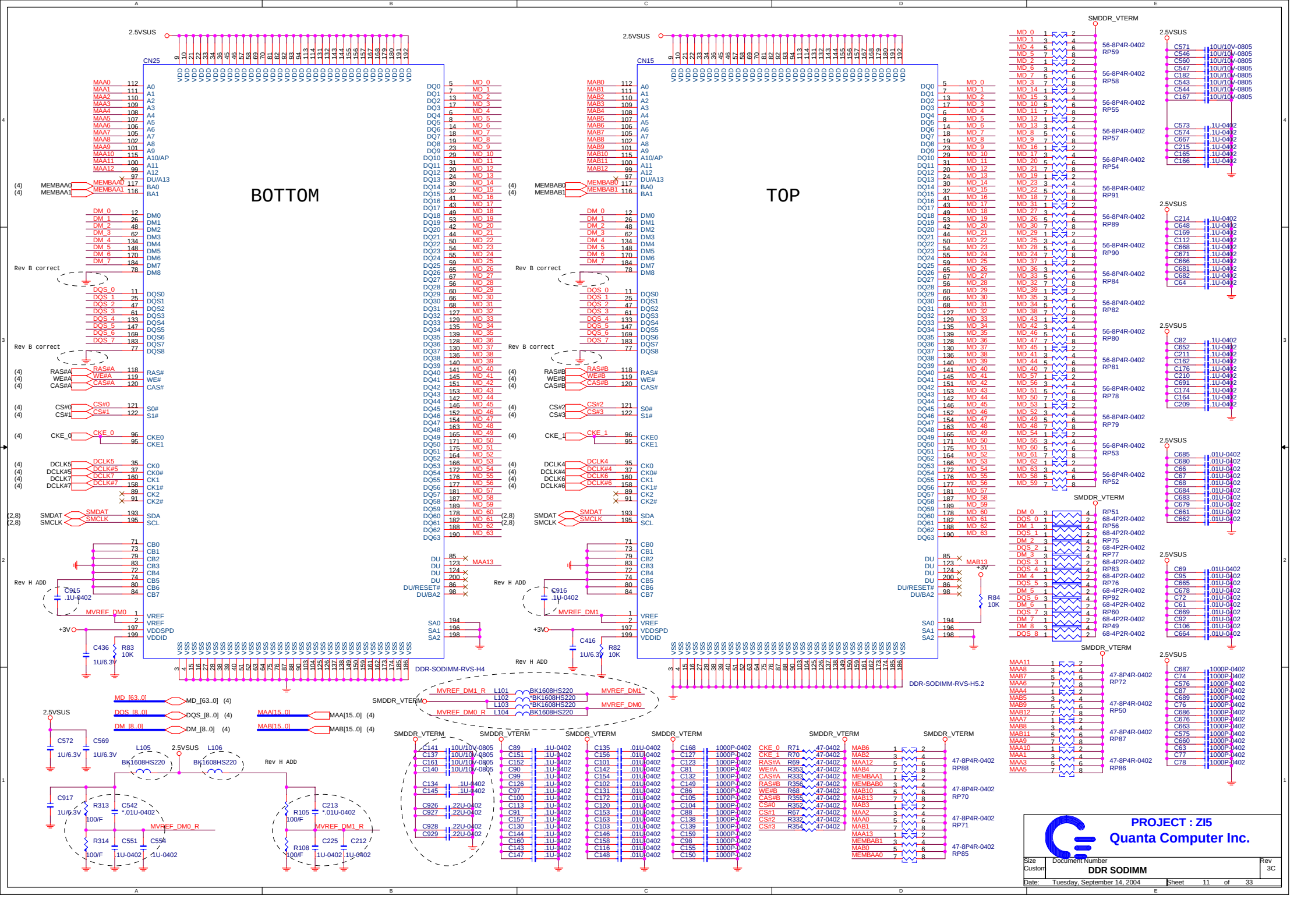
BOTTOM
TOP
CN25
CN15
DDR-SODIMM-RVS-H4
DDR-SODIMM-RVS-H5.2
2.5VSUS
SMDDR_VTERM
Rev B correct
Rev H ADD
MVREF_DM0
MVREF_DM1
MVREF_DM0_R
MVREF_DM1_R
MD_[63..0]
DQS_[8..0]
DM_[8..0]
MAA[15..0]
MAB[15..0]
PROJECT : ZI5
Quanta Computer Inc.
Size
Custom
Document Number
DDR SODIMM
Rev
3C
Date: Tuesday, September 14, 2004
Sheet 11 of 33

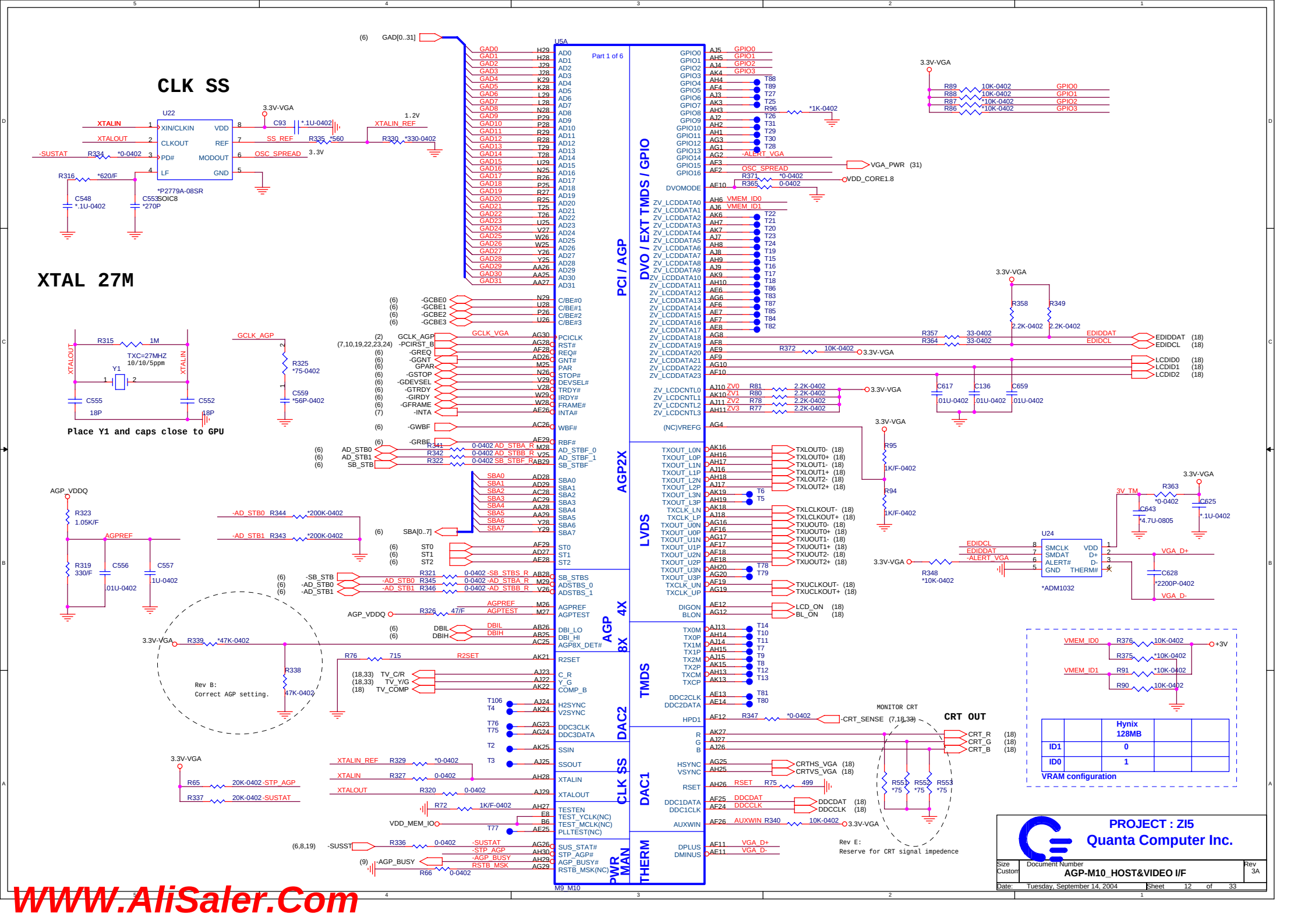

WWW.AliSaler.Com

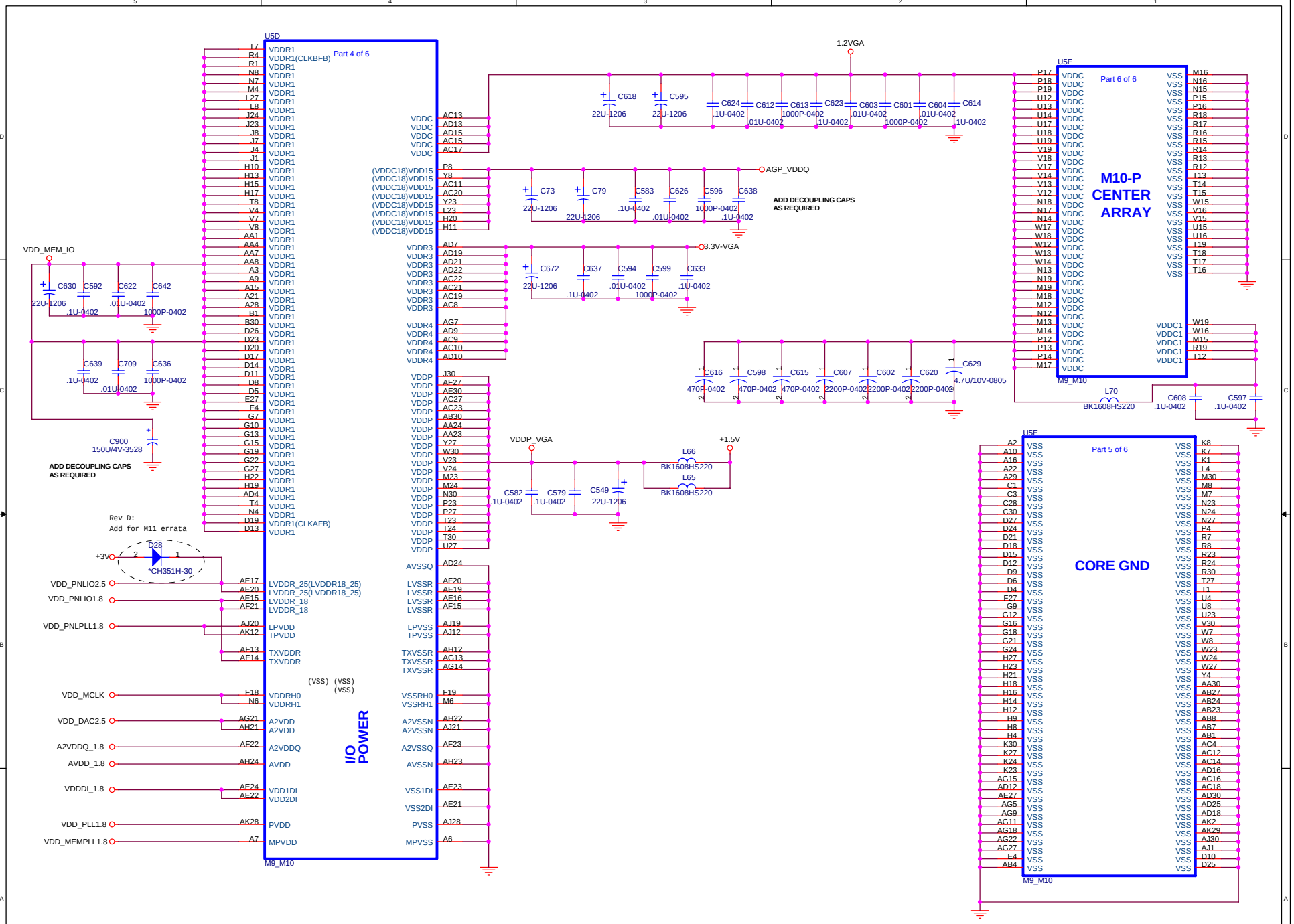
U5D
Part 4 of 6
I/O POWER
M9_M10
U5F
Part 6 of 6
M10-P CENTER ARRAY
M9_M10
U5E
Part 5 of 6
CORE GND
M9_M10
1.2VGA
AGP_VDDQ
3.3V-VGA
VDDP_VGA
+1.5V
VDD_MEM_IO
+3V
D28
*CH351H-30
Rev D:
Add for M11 errata
ADD DECOUPLING CAPS AS REQUIRED
ADD DECOUPLING CAPS AS REQUIRED
VDD_PNLIO2.5
VDD_PNLIO1.8
VDD_PNLPLL1.8
VDD_MCLK
VDD_DAC2.5
A2VDDQ_1.8
AVDD_1.8
VDDDI_1.8
VDD_PLL1.8
VDD_MEMPLL1.8
L70
BK1608HS220
L66
BK1608HS220
L65
BK1608HS220
C900
150U/4V-3528
PROJECT : ZI5
Quanta Computer Inc.
Size
Custom
Document Number
AGP-M10_POWER&GND
Rev
1A
Date: Tuesday, September 14, 2004
Sheet 13 of 33

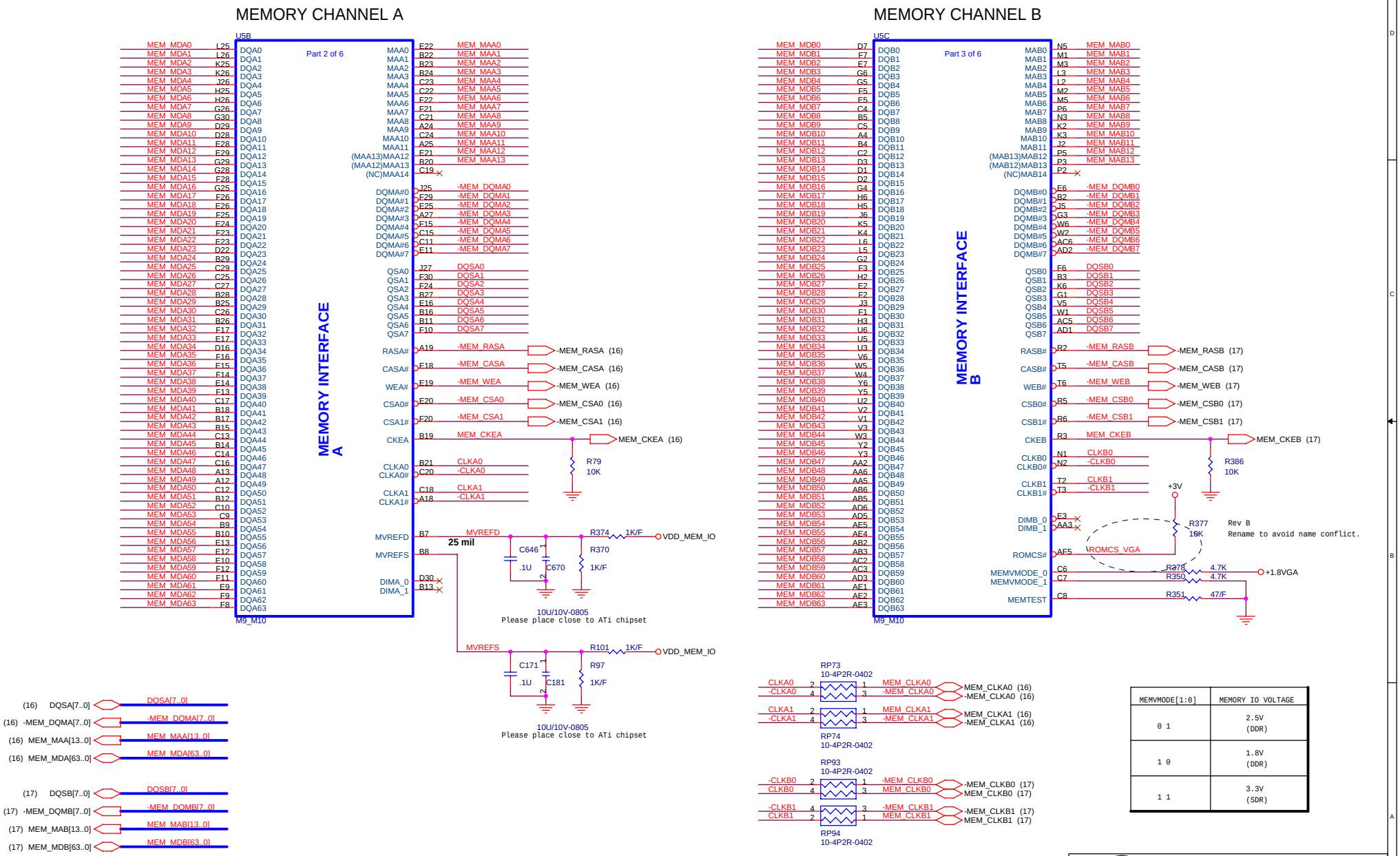

MEMVMODE[1:0]	MEMORY IO VOLTAGE
0 1	2.5V (DDR)
1 0	1.8V (DDR)
1 1	3.3V (SDR)

PROJECT : ZI5

Quanta Computer Inc.

Size	Document Number	Rev
Custom	AGP-M10_VRAM I/F	1A

Date: Tuesday, September 14, 2004 Sheet 14 of 33

WWW.AliSaler.Com

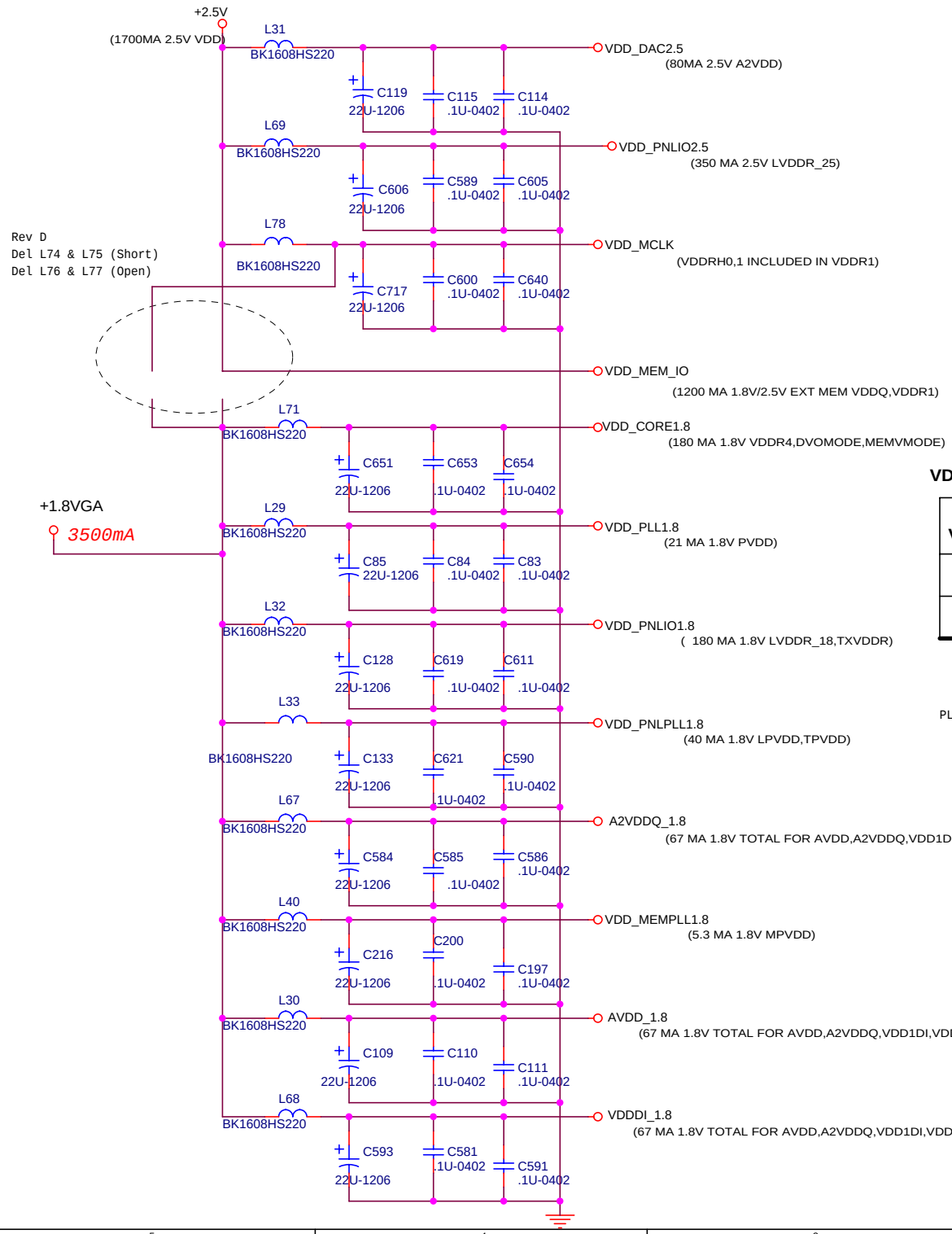

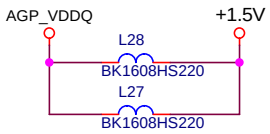

VDDRH, VDDQ AND VDDR1 VOLTAGE SELECTION

VDD_MEM_IO	FBa	FBb	FBc	FBd
1.8V (ELPIDA)	IN	OUT	OUT	IN
2.5V	OUT	IN	IN	OUT

PLACE CAPS FOR THESE GROUNDS CLOSE TO ASIC AND RUN DEDICATED TRACES
FROM PINS THAT JOIN TO GROUND PLANE WITH ONE VIA AT CAP

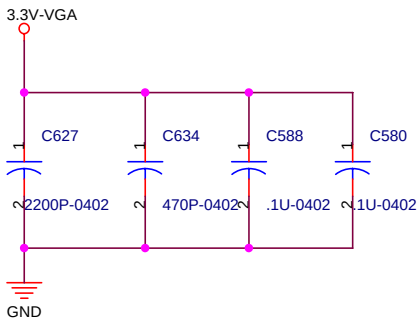

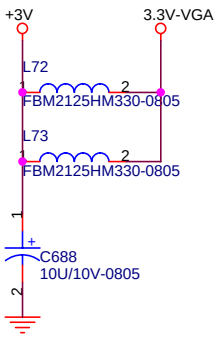

PROJECT : ZI5

Quanta Computer Inc.

Size	Document Number	Rev
Custom	VGA POWER	2B

Date: Tuesday, September 14, 2004 Sheet 15 of 33

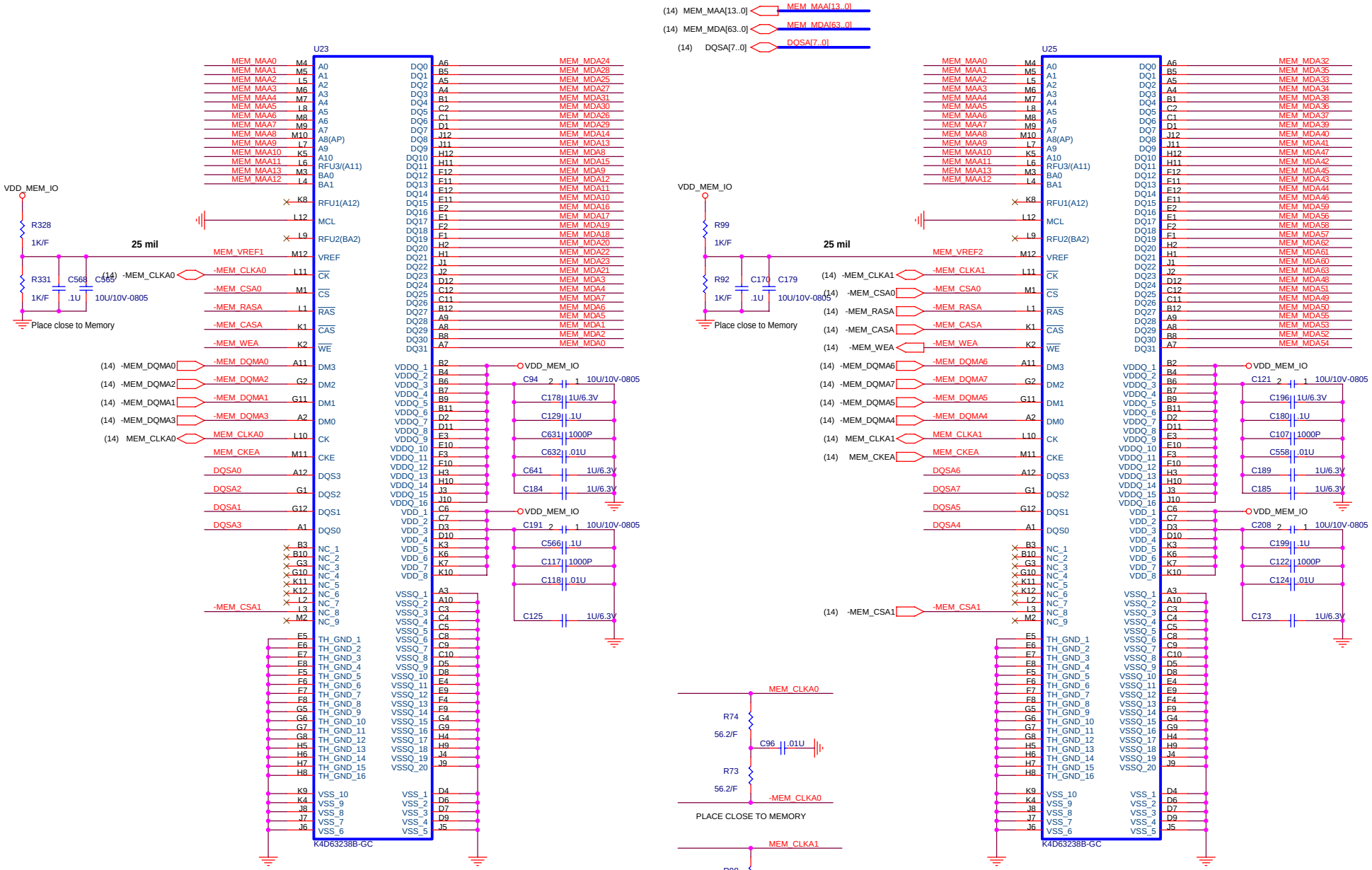

PROJECT : ZI5
Quanta Computer Inc.

Size	Document Number	Rev
Custom	VIDEO DDR MEMORY 1	1A

Date: Tuesday, September 14, 2004 Sheet 16 of 33

WWW.AliSaler.Com

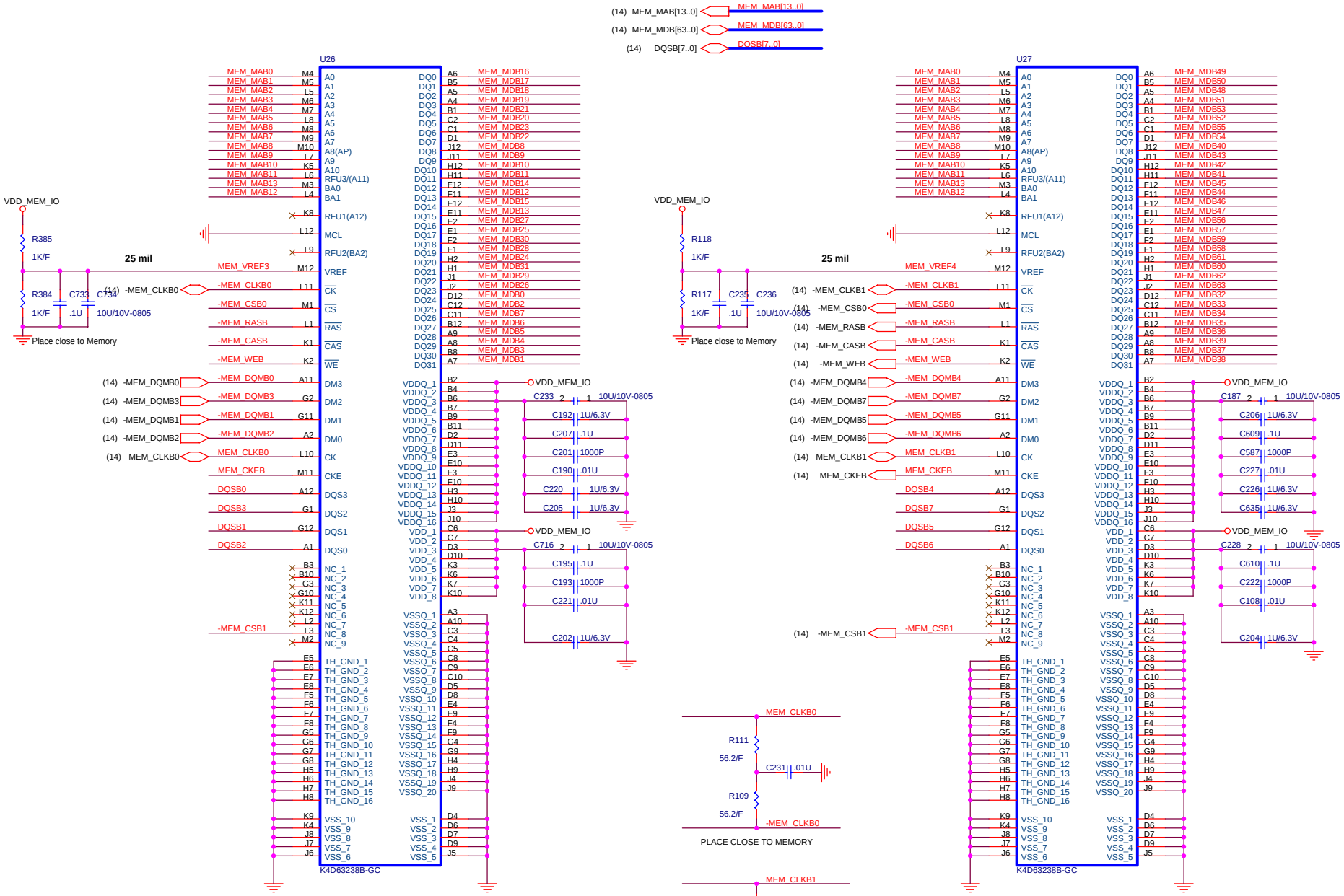

PROJECT : ZI5

Quanta Computer Inc.

Size	Document Number	Rev
Custom	VIDEO DDR MEMORY 2	1A

Date: Tuesday, September 14, 2004 Sheet 17 of 33

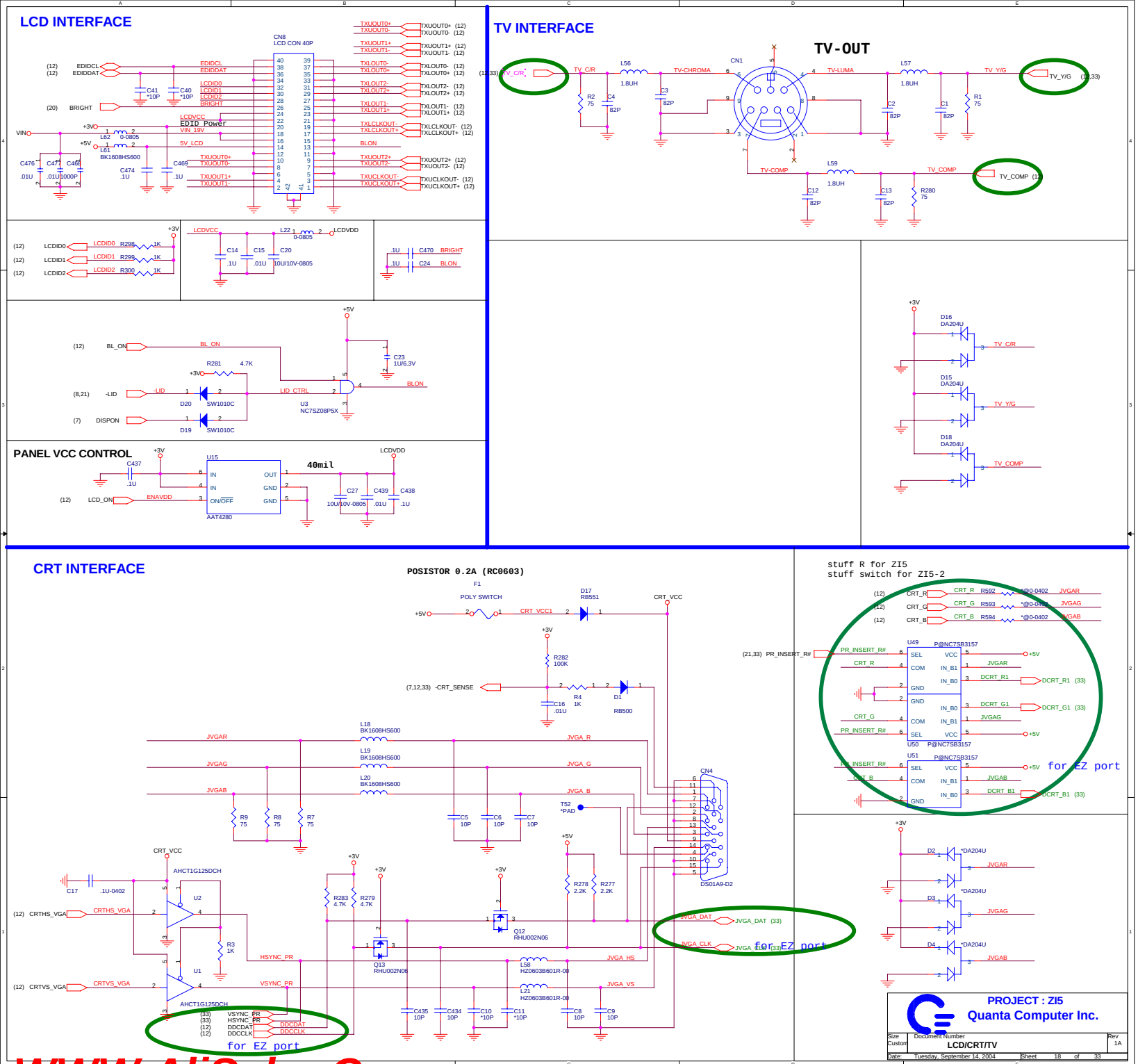

WWW.AliSaler.Com

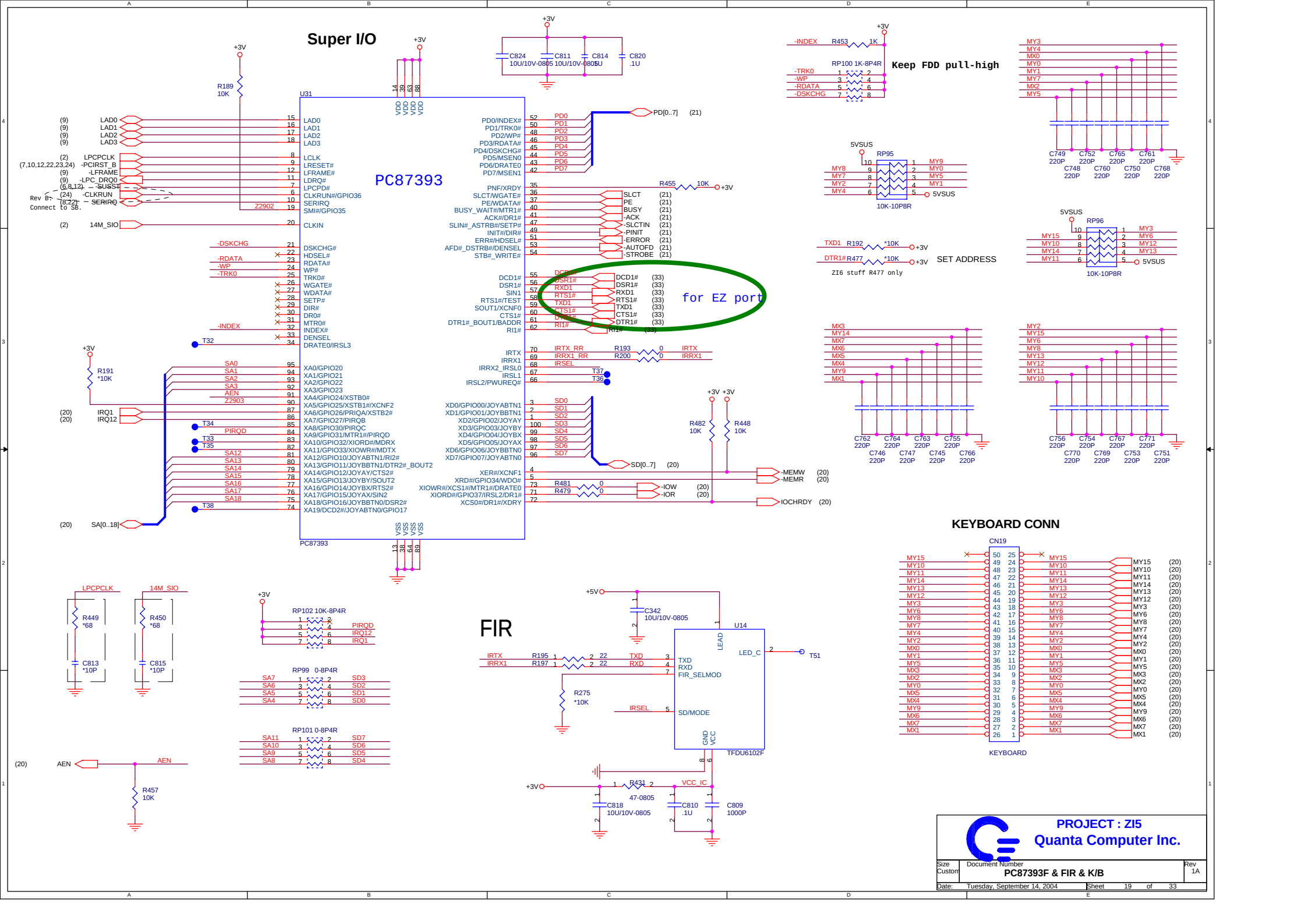
Super I/O
PC87393
U31
for EZ port
Keep FDD pull-high
SET ADDRESS
ZI6 stuff R477 only
KEYBOARD CONN
CN19
KEYBOARD
FIR
U14
TFDU6102F
PROJECT : ZI5
Quanta Computer Inc.
Document Number
PC87393F & FIR & K/B
Size Custom
Rev 1A
Date: Tuesday, September 14, 2004
Sheet 19 of 33

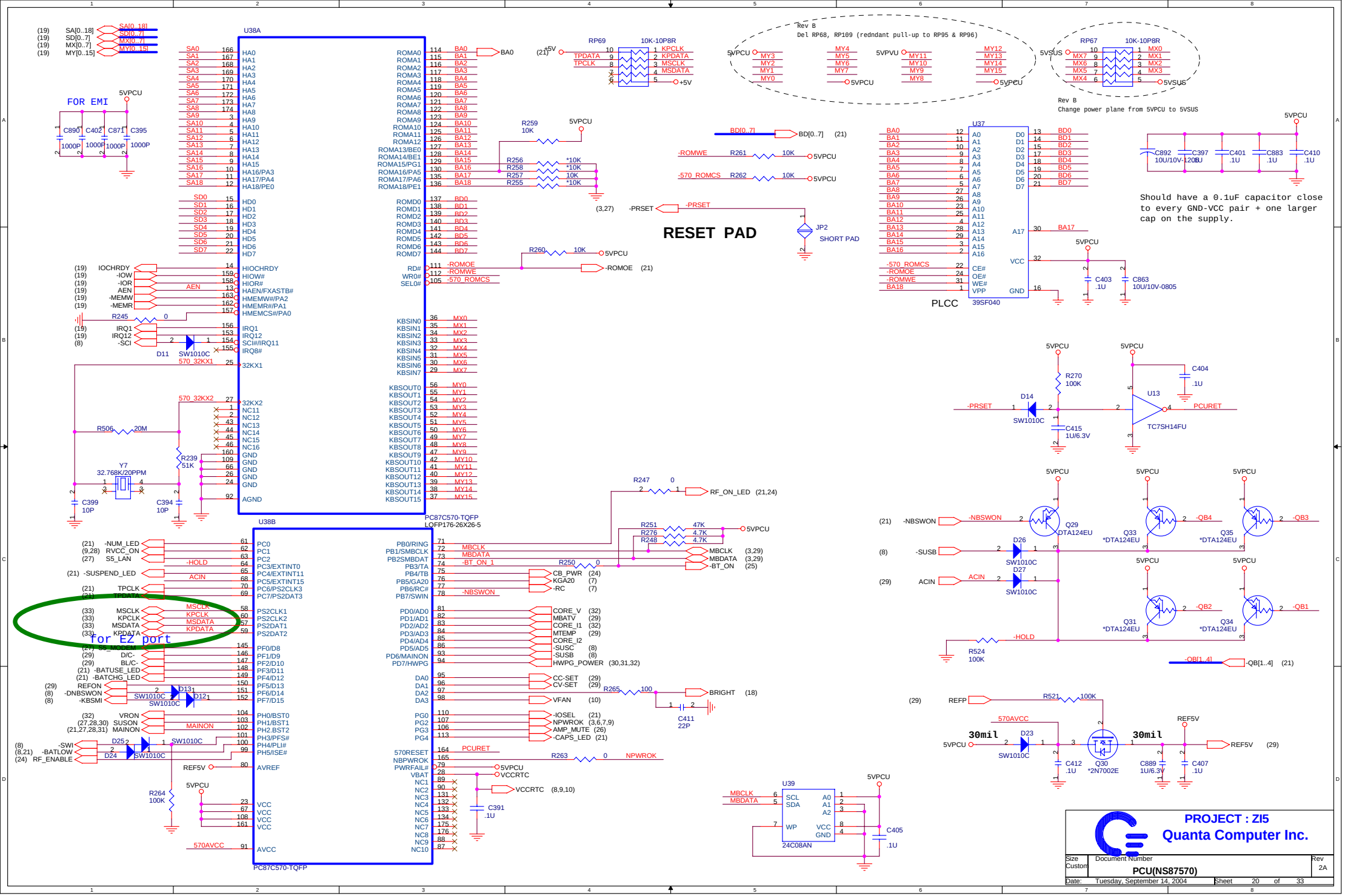

WWW.AliSaler.Com

Touch Pad/B CONNECTOR

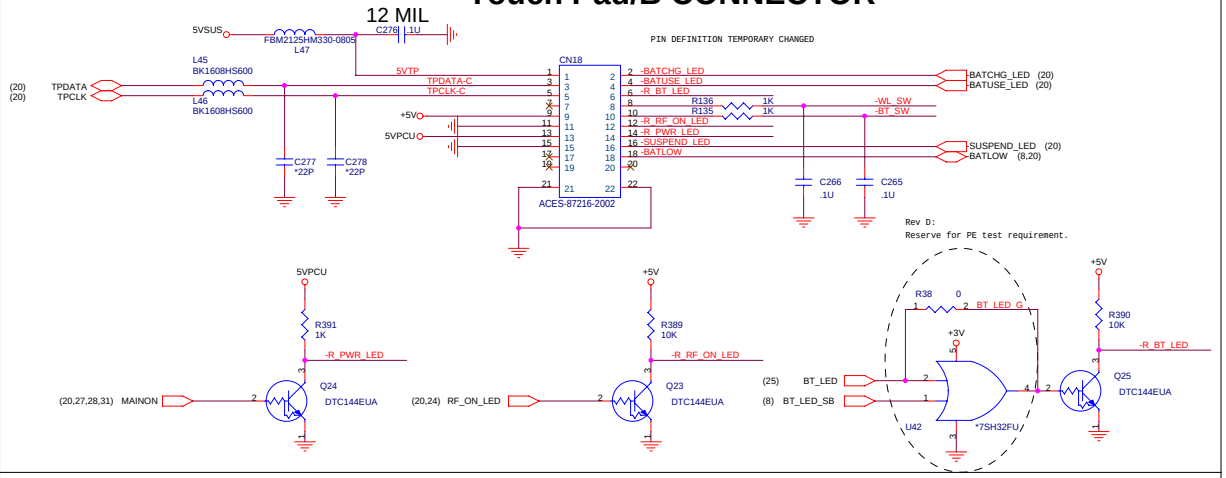

LED/B CONNECTOR

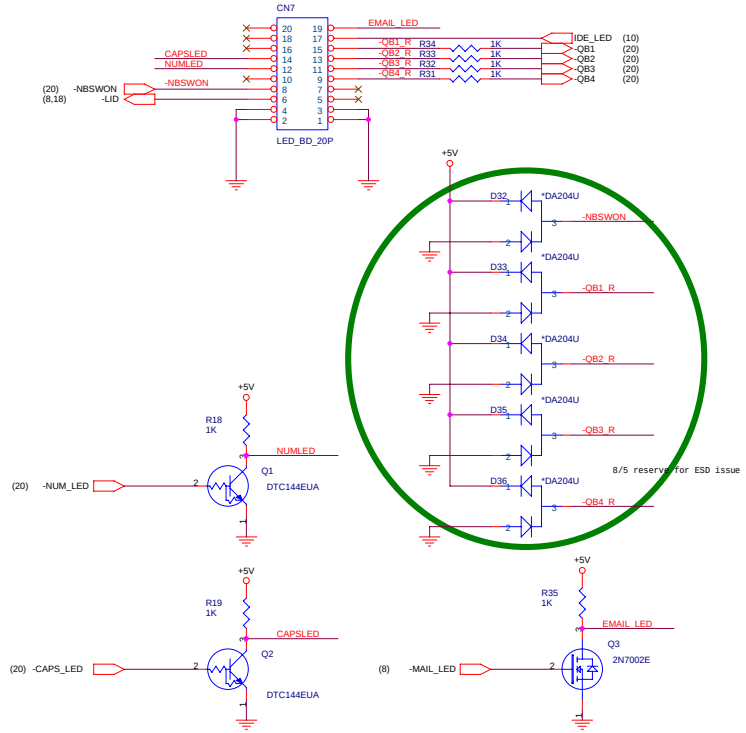

570 EXPEND I/O

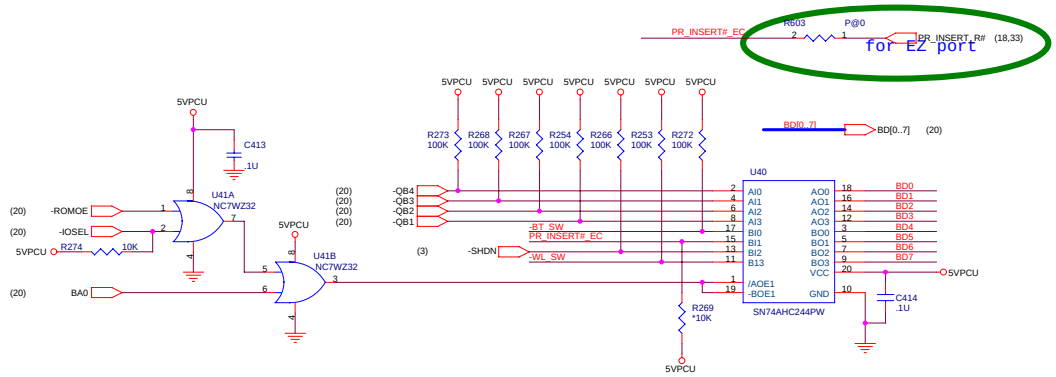

LPT

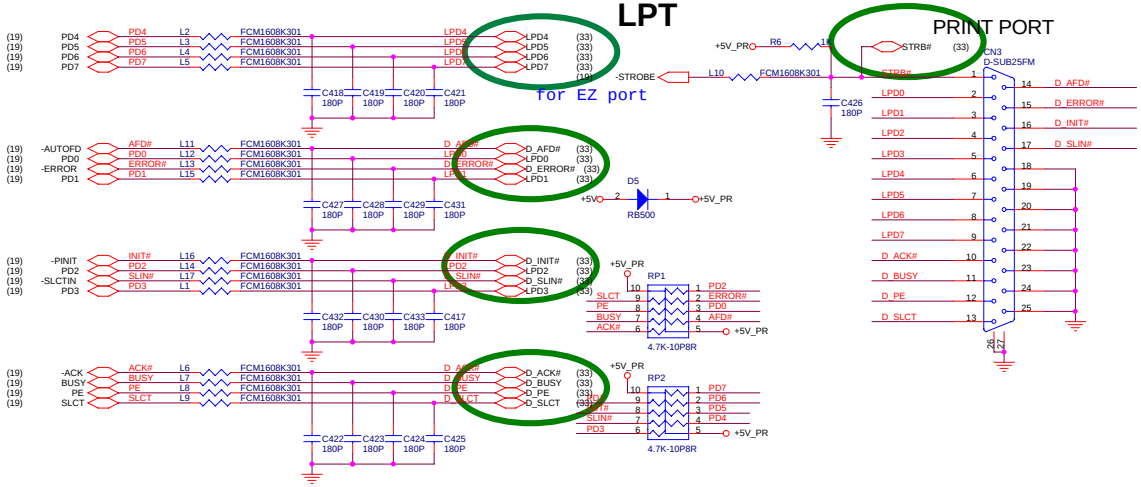

Screw Holes

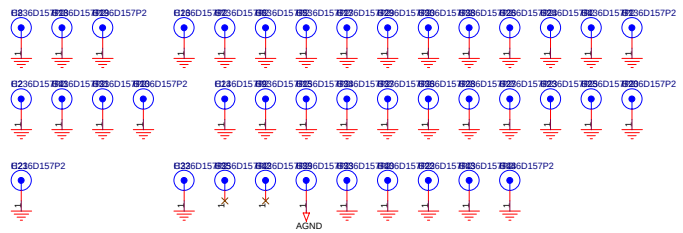

6/14 DEL H3,H11,H12,H13,P9

EMI Pads

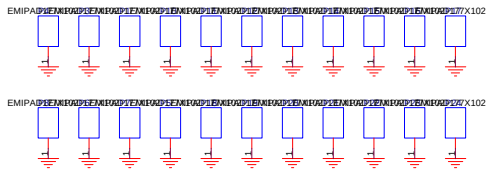

PROJECT : ZI5

Quanta Computer Inc.

Size	Document Number	Rev
	T/P & LED & LPT & 570IO & Screw Holes	3A

Date: Tuesday, September 14, 2004 Sheet 21 of 33

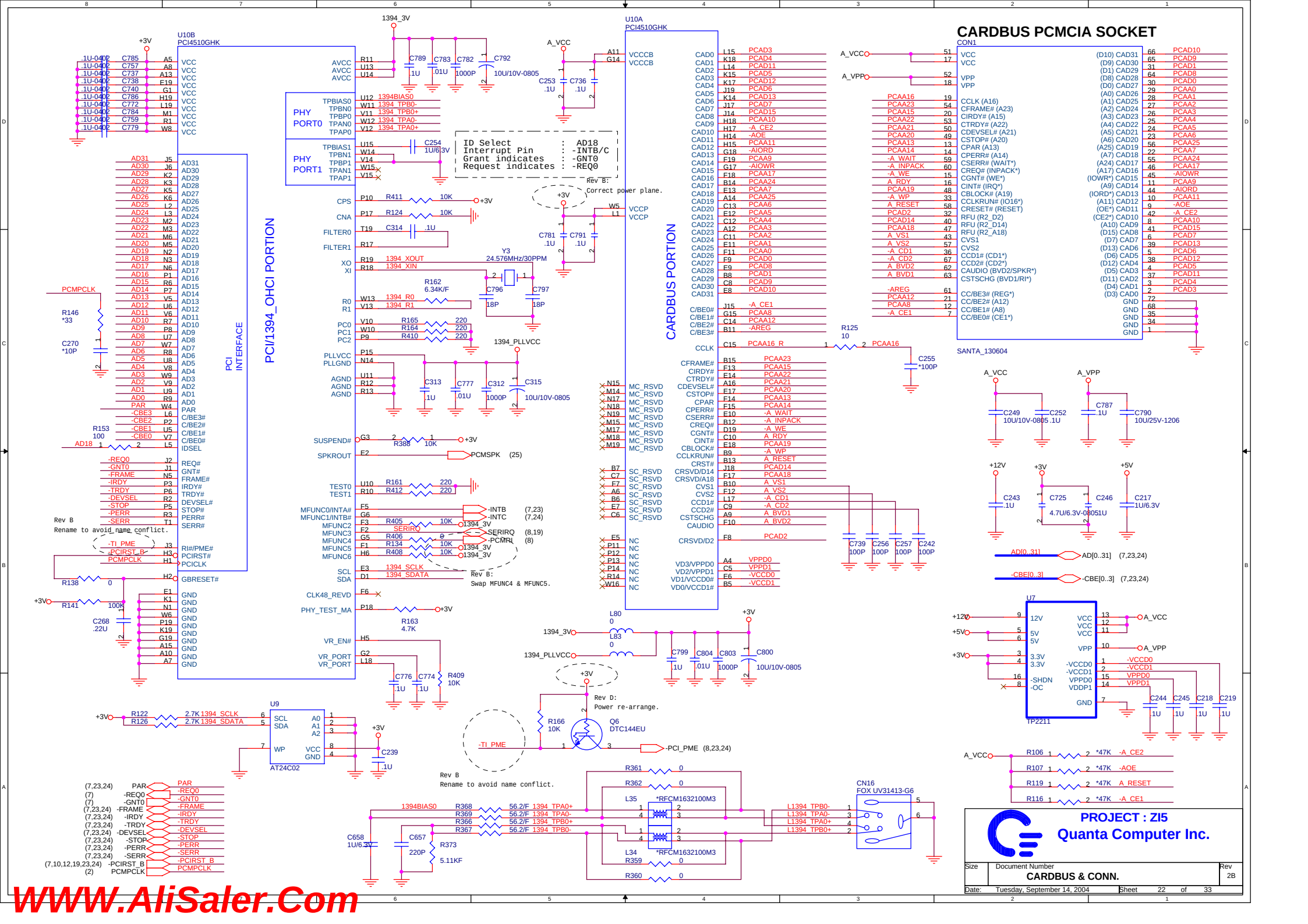

WWW.AliSaler.Com

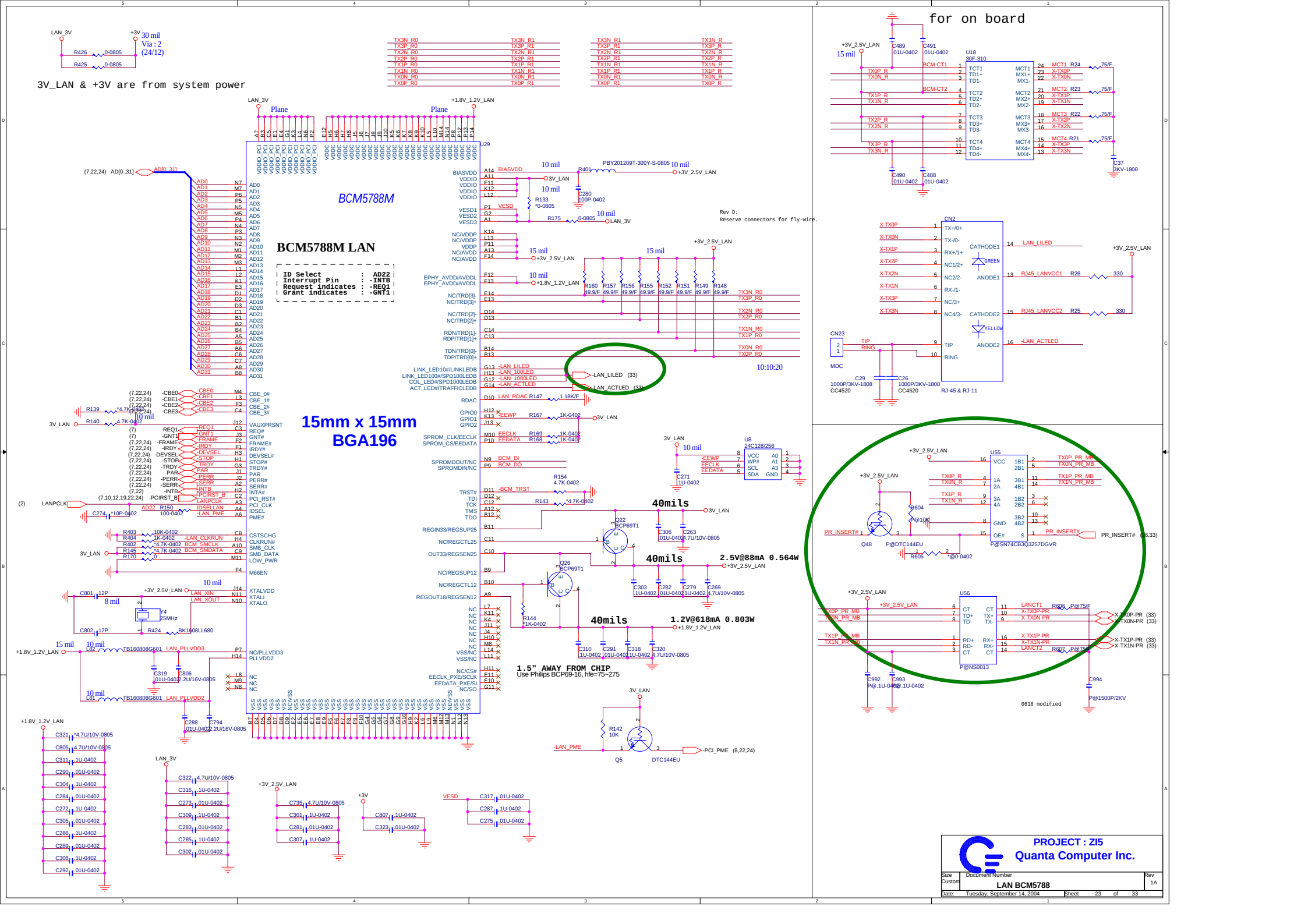
3V_LAN & +3V are from system power
BCM5788M
BCM5788M LAN
ID Select : AD22
Interrupt Pin : -INTB
Request indicates : -REQ1
Grant indicates : -GNT1
15mm x 15mm
BGA196
1.5" AWAY FROM CHIP
Use Philips BCP69-16, hfe=75~275
2.5V@88mA 0.564W
1.2V@618mA 0.803W
for on board
RJ-45 & RJ-11
PROJECT : ZI5
Quanta Computer Inc.
LAN BCM5788
Tuesday, September 14, 2004

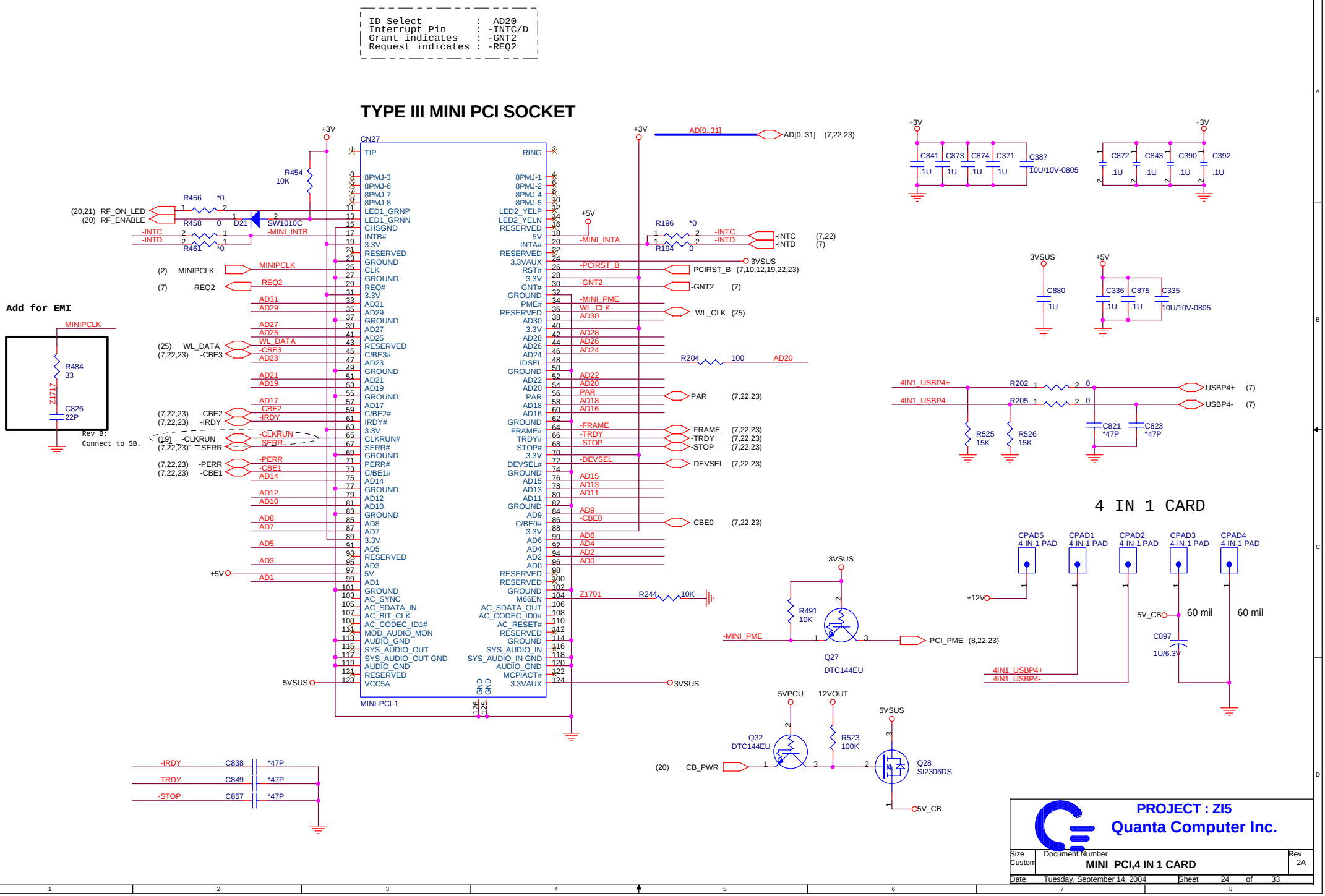

WWW.AliSaler.Com

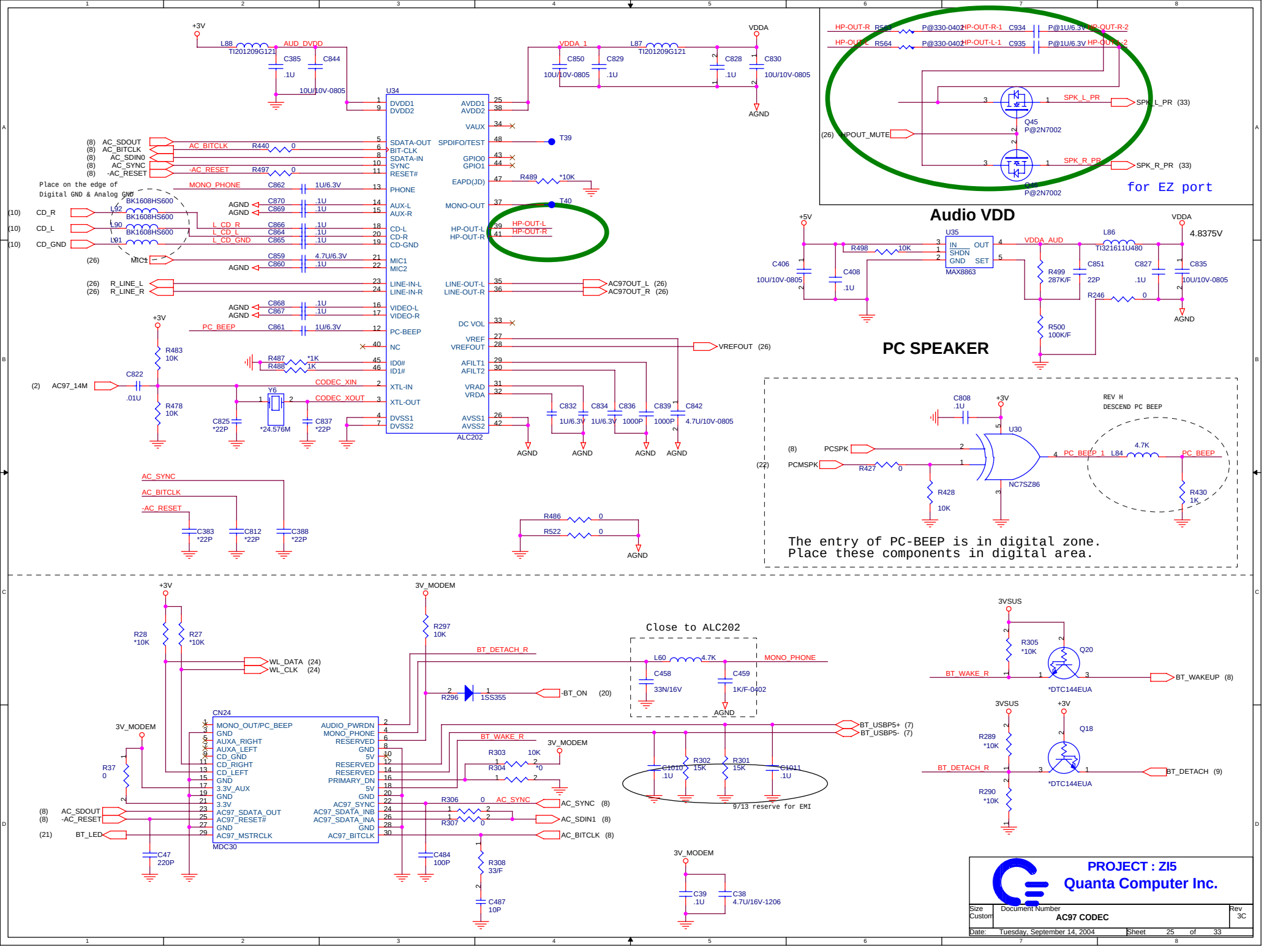

PROJECT : ZI5
Quanta Computer Inc.

Size	Document Number	Rev
Custom	AC97 CODEC	3C

Date: Tuesday, September 14, 2004 Sheet 25 of 33

Audio amplifier

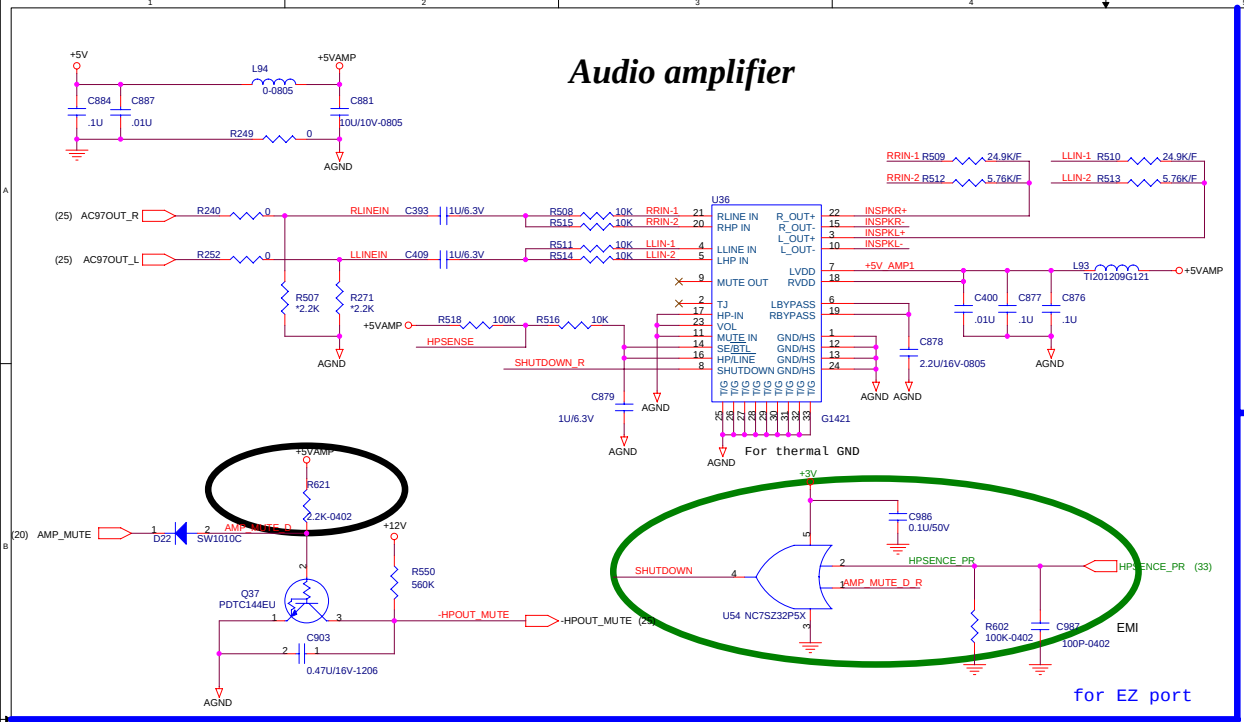

Headphone out

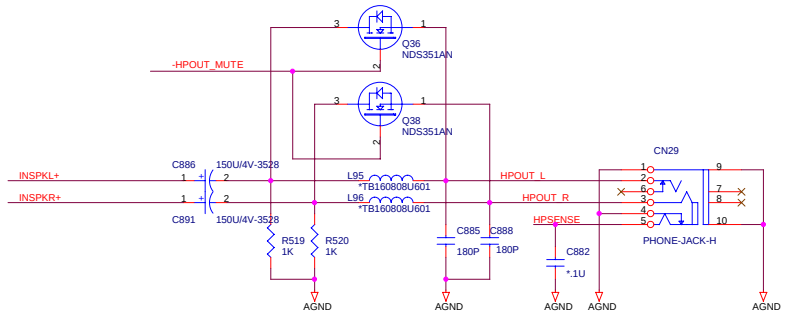

Line in

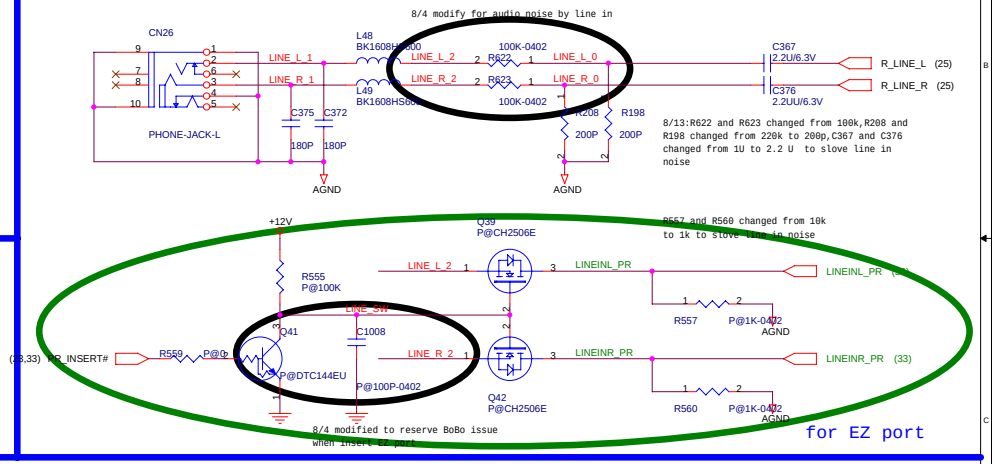

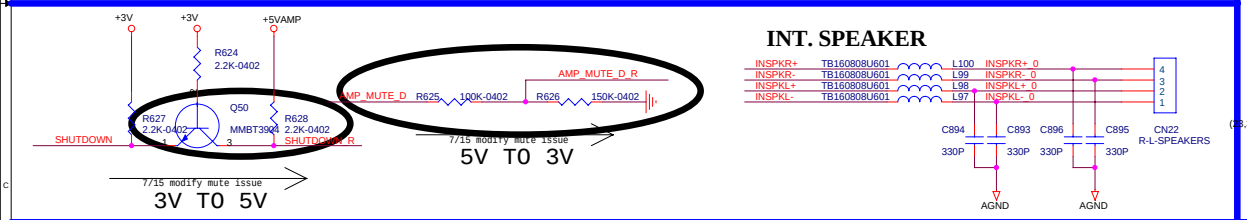

INT. SPEAKER

Mic in

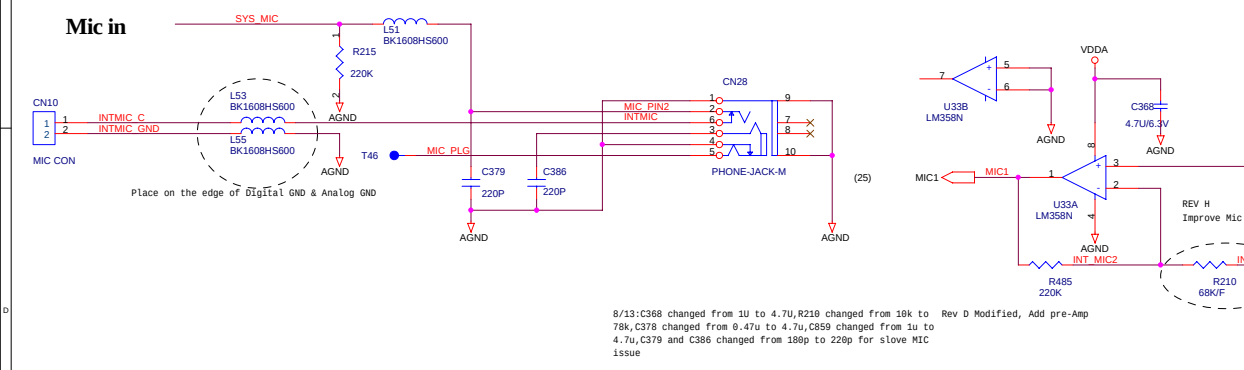

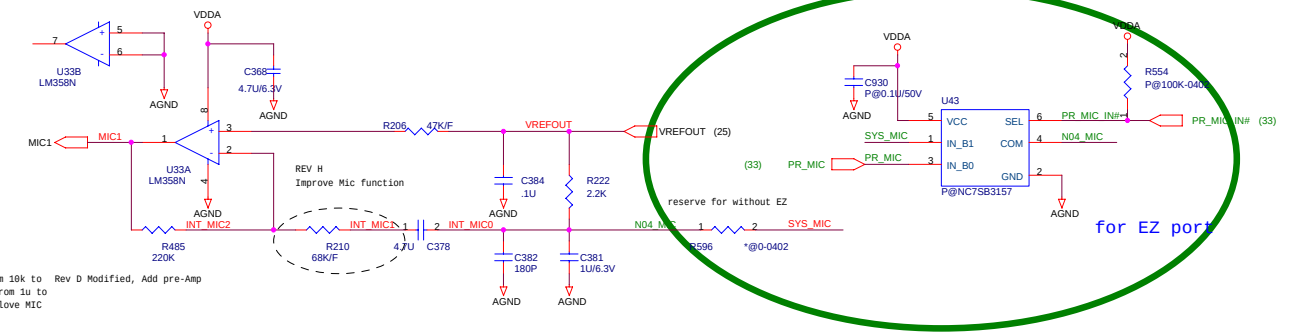

8/13:C368 changed from 1U to 4.7U,R210 changed from 10k to 78k,C378 changed from 0.47u to 4.7u,C859 changed from 1u to 4.7u,C379 and C386 changed from 180p to 220p for slove MIC issue

Rev D Modified, Add pre-Amp

Size Custom	Document Number AUDIO AMP & JACK	Rev 3C
Date: Tuesday, September 14, 2004	Sheet 26 of 33	

PROJECT : ZI5
Quanta Computer Inc.

WWW.AliSaler.Com

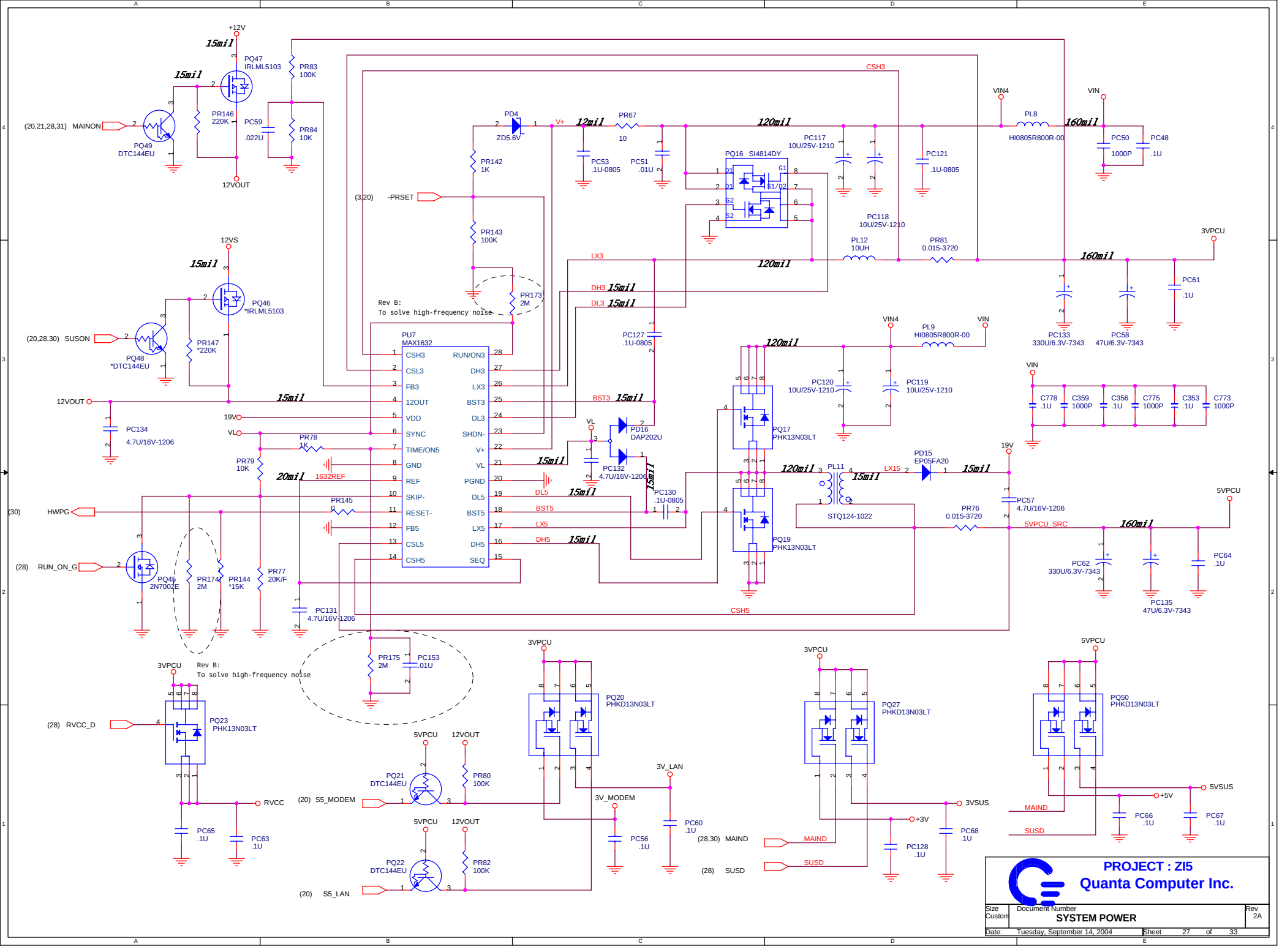
PROJECT : ZI5
Quanta Computer Inc.
SYSTEM POWER
Size Custom
Document Number
Rev 2A
Date: Tuesday, September 14, 2004
Sheet 27 of 33
PU7 MAX1632
Rev B: To solve high-frequency noise
PQ47 IRLML5103
PQ46 *IRLML5103
PQ49 DTC144EU
PQ48 *DTC144EU
PQ45 2N7002E
PQ23 PHK13N03LT
PQ16 SI4814DY
PQ17 PHK13N03LT
PQ19 PHK13N03LT
PQ20 PHKD13N03LT
PQ27 PHKD13N03LT
PQ50 PHKD13N03LT
PQ21 DTC144EU
PQ22 DTC144EU
PD4 ZD5.6V
PD16 DAP202U
PD15 EP05FA20
PL11 STQ124-1022
PL8 HI0805R800R-00
PL9 HI0805R800R-00
PL12 10UH
PR81 0.015-3720
PR76 0.015-3720
PR67 10
PR83 100K
PR84 10K
PR146 220K
PR147 *220K
PR142 1K
PR143 100K
PR173 2M
PR78 1K
PR79 10K
PR145 0
PR174 2M
PR144 *15K
PR77 20K/F
PR175 2M
PR80 100K
PR82 100K
PC59 .022U
PC53 .1U-0805
PC51 .01U
PC117 10U/25V-1210
PC118 10U/25V-1210
PC121 .1U-0805
PC50 1000P
PC48 .1U
PC133 330U/6.3V-7343
PC58 47U/6.3V-7343
PC61 .1U
PC127 .1U-0805
PC120 10U/25V-1210
PC119 10U/25V-1210
C778 .1U
C359 1000P
C356 .1U
C775 1000P
C353 .1U
C773 1000P
PC134 4.7U/16V-1206
PC132 4.7U/16V-1206
PC130 .1U-0805
PC131 4.7U/16V-1206
PC57 4.7U/16V-1206
PC62 330U/6.3V-7343
PC135 47U/6.3V-7343
PC64 .1U
PC153 .01U
PC65 .1U
PC63 .1U
PC56 .1U
PC60 .1U
PC128 .1U
PC68 .1U
PC66 .1U
PC67 .1U
(20,21,28,31) MAINON
(20,28,30) SUSON
(30) HWPG
(28) RUN_ON_G
(28) RVCC_D
(20) S5_MODEM
(20) S5_LAN
(3,20) -PRSET
(28,30) MAIND
(28) SUSD
+12V
12VOUT
12VS
19V
VL
VIN4
VIN
3VPCU
5VPCU
5VSUS
+5V
+3V
3V_LAN
3V_MODEM
3VSUS
RVCC
1632REF
5VPCU_SRC
CSH3
CSH5
LX3
DH3
DL3
BST3
DL5
BST5
LX5
DH5
LX15
MAIND
SUSD
15mil
20mil
12mil
120mil
160mil

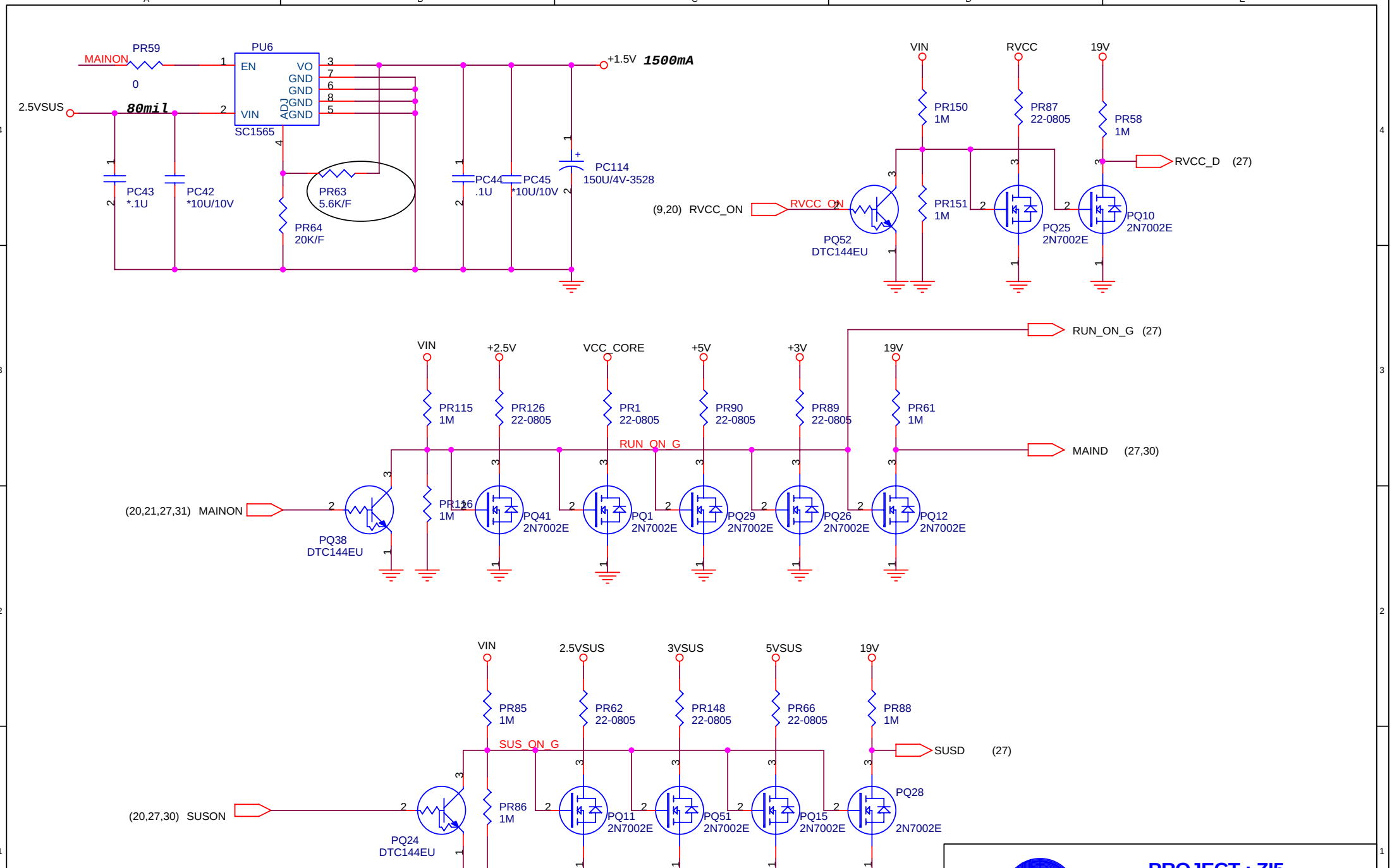

PROJECT : ZI5

Quanta Computer Inc.

Size	Document Number	Rev
Custom	DISCHARGE CIRCUIT	1A
Date: Tuesday, September 14, 2004	Sheet 28 of 33	

WWW.AliSaler.Com

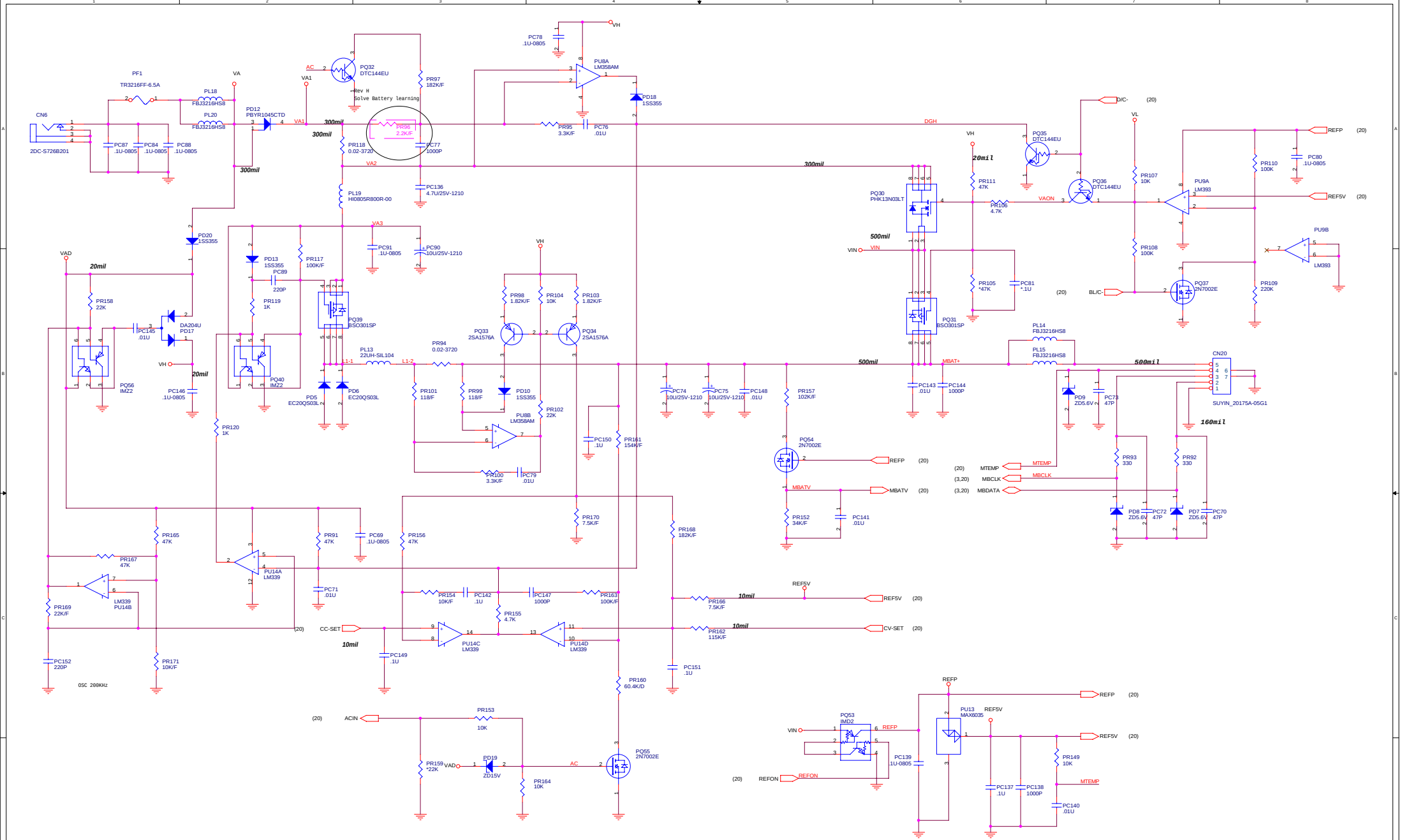

PROJECT : ZI5		
Quanta Computer Inc.		
Size: Custom	Document Number: **BATTERY CONN&POWER JACK**	Rev: 3C
Date: Tuesday, September 14, 2004	Sheet 29 of 33	

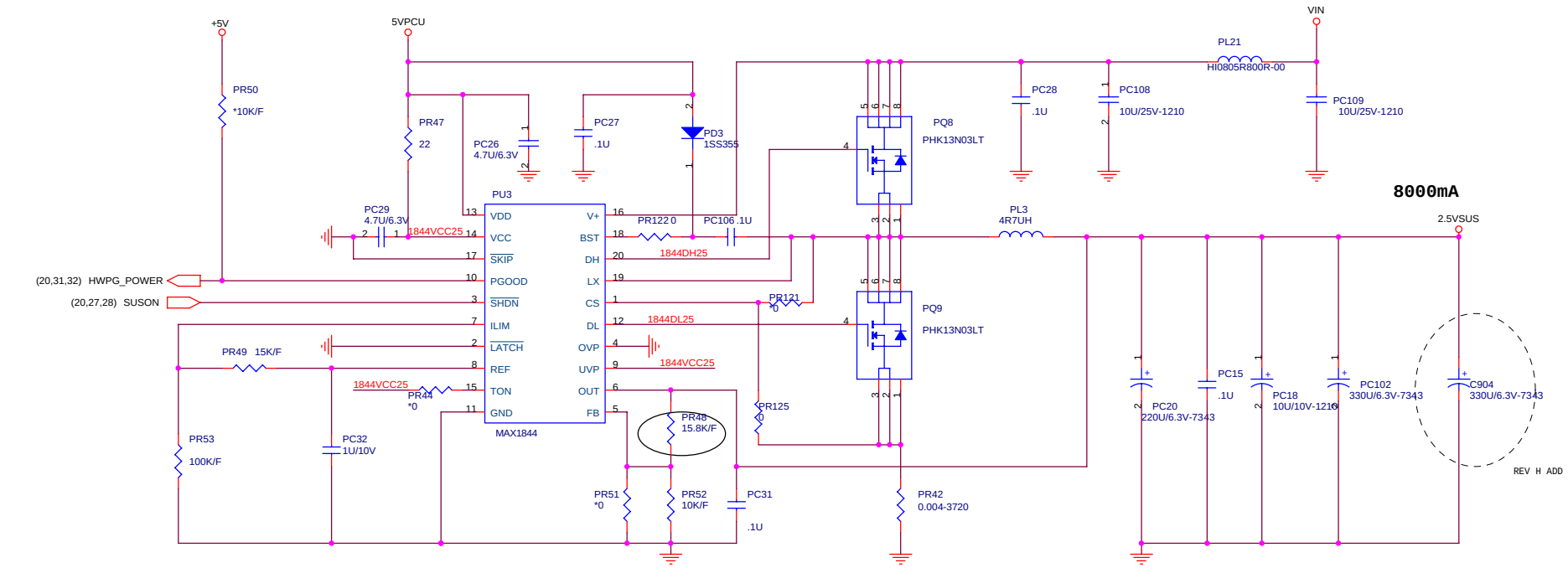

Rev E:
Hardware modify due to AMD suggestion

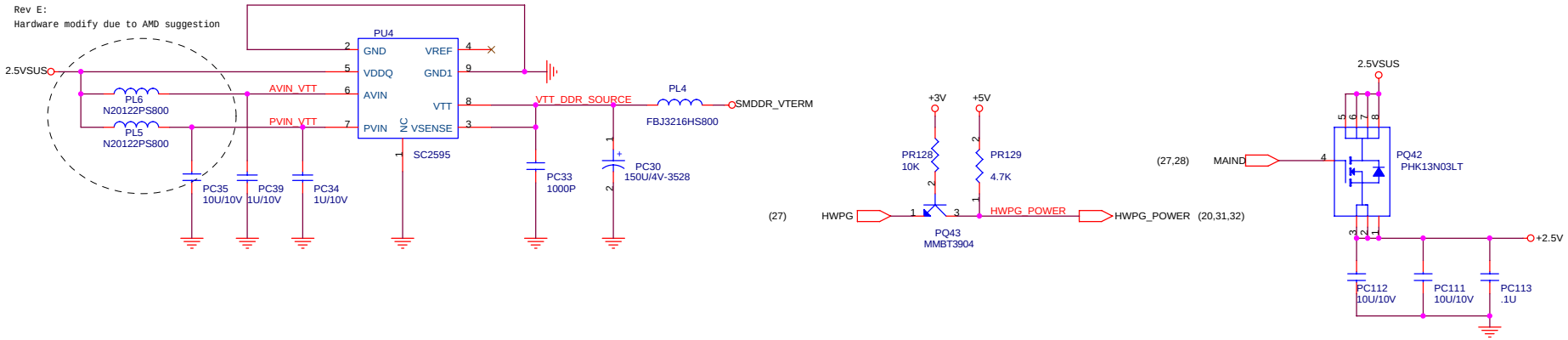

PROJECT : ZI5
Quanta Computer Inc.

Size	Document Number	Rev
Custom	SYS POWER 2.5V&DDR	3C

Date: Tuesday, September 14, 2004 Sheet 30 of 33

WWW.AliSaler.Com

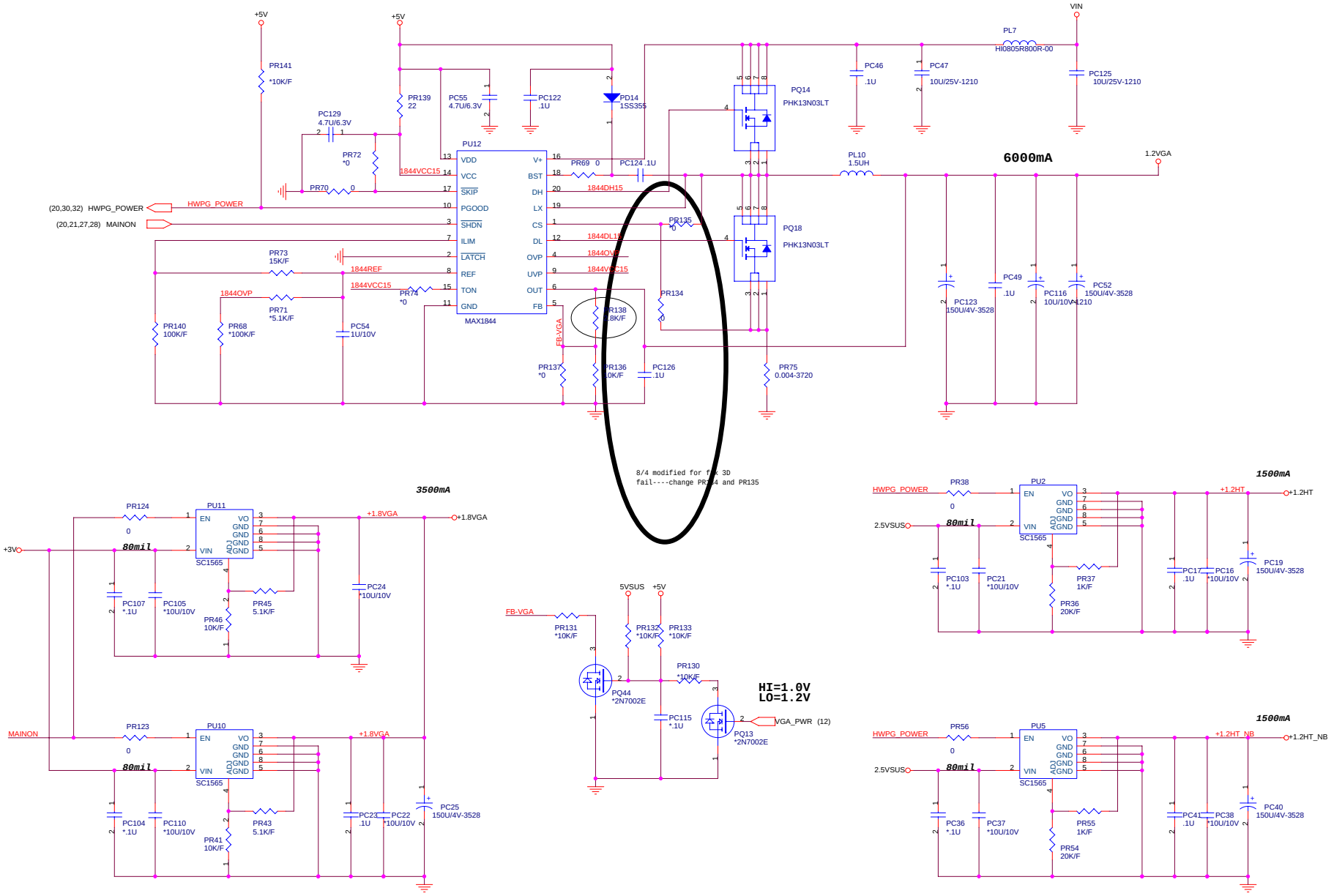

PROJECT : ZI5

Quanta Computer Inc.

Size	Document Number	Rev
Custom	SYS POWER 2.5V&DDR	2A

Date: Tuesday, September 14, 2004 Sheet 31 of 33

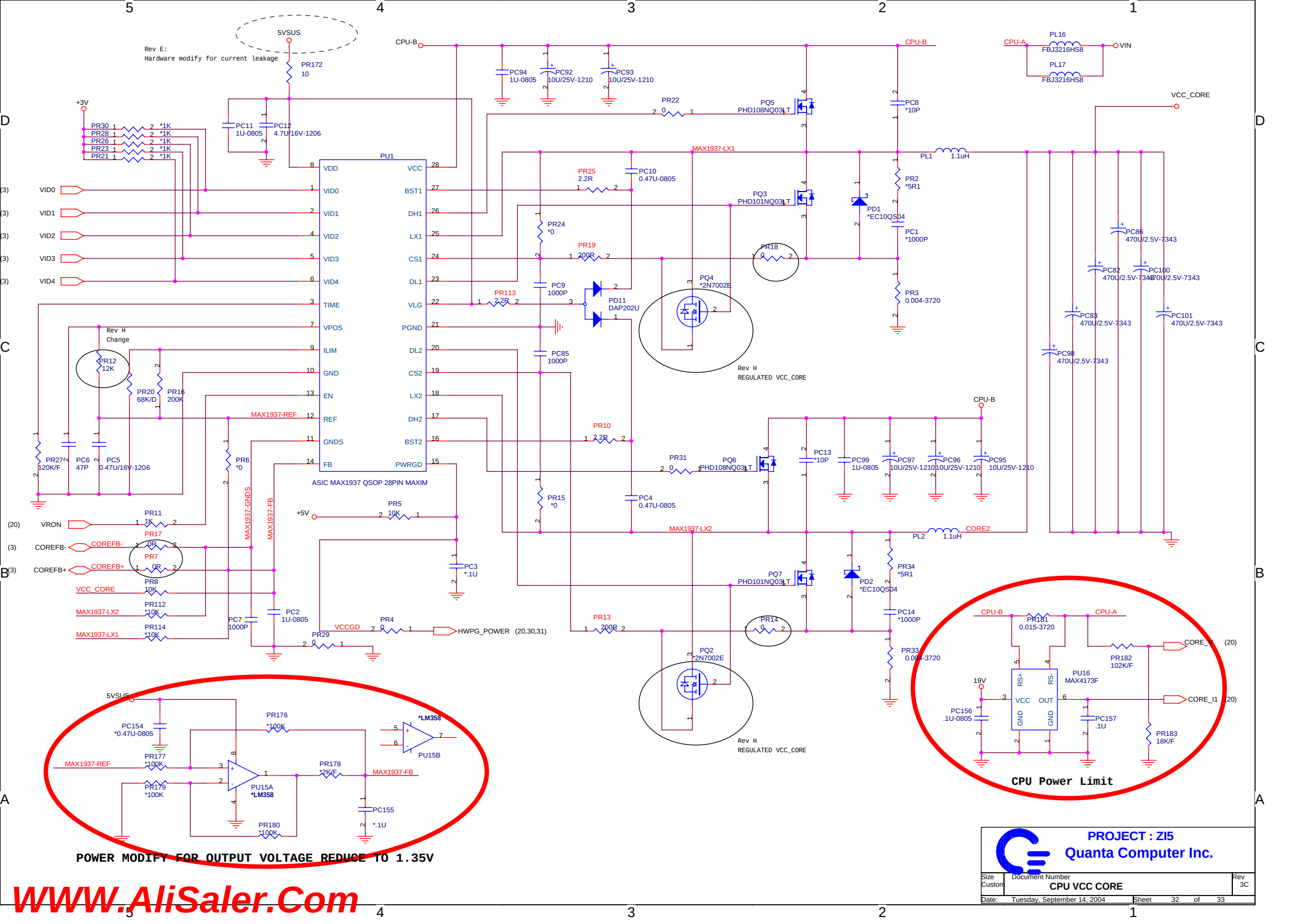

WWW.AliSaler.Com

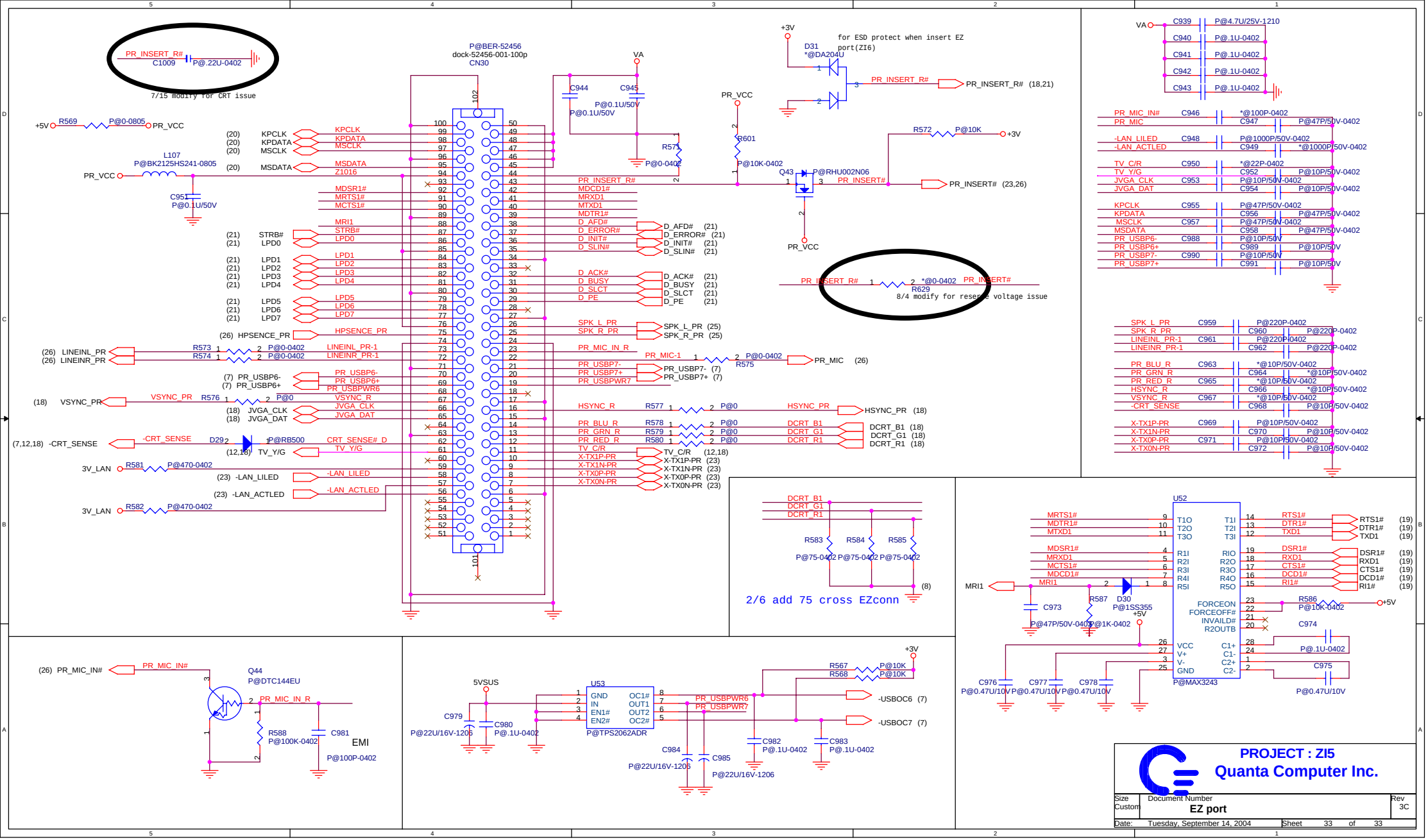
PR_INSERT_R#
C1009
P@.22U-0402
7/15 modify for CRT issue
P@BER-52456
dock-52456-001-100p
CN30
+5V
R569
P@0-0805
PR_VCC
L107
P@BK2125HS241-0805
C951
P@0.1U/50V
VA
C944
C945
P@0.1U/50V
P@0.1U/50V
R571
P@0-0402
PR_VCC
R601
P@10K-0402
+3V
D31
*@DA204U
for ESD protect when insert EZ port(ZI6)
PR_INSERT_R# (18,21)
R572
P@10K
+3V
Q43
P@RHU002N06
PR_INSERT# (23,26)
PR_VCC
PR_INSERT_R#
*@0-0402
R629
PR_INSERT#
8/4 modify for reserve voltage issue
KPCLK
KPDATA
MSCLK
MSDATA
Z1016
MDSR1#
MRTS1#
MCTS1#
MRI1
STRB#
LPD0
LPD1
LPD2
LPD3
LPD4
LPD5
LPD6
LPD7
HPSENCE_PR
LINEINL_PR-1
LINEINR_PR-1
PR_USBP6-
PR_USBP6+
PR_USBPWR6
VSYNC_R
JVGA_CLK
JVGA_DAT
CRT_SENSE# D
TV_Y/G
LINEINL_PR
LINEINR_PR
VSYNC_PR
R576
P@0
D29
P@RB500
-CRT_SENSE
3V_LAN
R581
P@470-0402
-LAN_LILED
-LAN_ACTLED
R582
P@470-0402
PR_INSERT_R#
MDCD1#
MRXD1
MTXD1
MDTR1#
D_AFD#
D_ERROR#
D_INIT#
D_SLIN#
D_ACK#
D_BUSY
D_SLCT
D_PE
SPK_L_PR
SPK_R_PR
PR_MIC_IN_R
PR_MIC-1
R575
PR_MIC
PR_USBP7-
PR_USBP7+
PR_USBPWR7
HSYNC_R
R577
HSYNC_PR
PR_BLU_R
PR_GRN_R
PR_RED_R
R578
R579
R580
DCRT_B1
DCRT_G1
DCRT_R1
TV_C/R
X-TX1P-PR
X-TX1N-PR
X-TX0P-PR
X-TX0N-PR
R583
R584
R585
P@75-0402
2/6 add 75 cross EZconn
VA
C939
P@4.7U/25V-1210
C940
P@.1U-0402
C941
P@.1U-0402
C942
P@.1U-0402
C943
P@.1U-0402
PR_MIC_IN#
C946
*@100P-0402
PR_MIC
C947
P@47P/50V-0402
-LAN_LILED
C948
P@1000P/50V-0402
-LAN_ACTLED
C949
*@1000P/50V-0402
TV_C/R
C950
*@22P-0402
TV_Y/G
C952
P@10P/50V-0402
JVGA_CLK
C953
P@10P/50V-0402
JVGA_DAT
C954
P@10P/50V-0402
KPCLK
C955
P@47P/50V-0402
KPDATA
C956
P@47P/50V-0402
MSCLK
C957
P@47P/50V-0402
MSDATA
C958
P@47P/50V-0402
PR_USBP6-
C988
P@10P/50V
PR_USBP6+
C989
P@10P/50V
PR_USBP7-
C990
P@10P/50V
PR_USBP7+
C991
P@10P/50V
SPK_L_PR
C959
P@220P-0402
SPK_R_PR
C960
P@220P-0402
LINEINL_PR-1
C961
P@220P-0402
LINEINR_PR-1
C962
P@220P-0402
PR_BLU_R
C963
*@10P/50V-0402
PR_GRN_R
C964
*@10P/50V-0402
PR_RED_R
C965
*@10P/50V-0402
HSYNC_R
C966
*@10P/50V-0402
VSYNC_R
C967
*@10P/50V-0402
-CRT_SENSE
C968
P@10P/50V-0402
X-TX1P-PR
C969
P@10P/50V-0402
X-TX1N-PR
C970
P@10P/50V-0402
X-TX0P-PR
C971
P@10P/50V-0402
X-TX0N-PR
C972
P@10P/50V-0402
U52
MRTS1#
MDTR1#
MTXD1
MDSR1#
MRXD1
MCTS1#
MDCD1#
MRI1
RTS1#
DTR1#
TXD1
DSR1#
RXD1
CTS1#
DCD1#
RI1#
T1O
T2O
T3O
T1I
T2I
T3I
R1I
R2I
R3I
R4I
R5I
RIO
R2O
R3O
R4O
R5O
FORCEON
FORCEOFF#
INVAILD#
R2OUTB
VCC
V+
V-
GND
C1+
C1-
C2+
C2-
P@MAX3243
R587
D30
P@1SS355
P@1K-0402
C973
P@47P/50V-0402
R586
P@10K-0402
C974
P@.1U-0402
C975
P@0.47U/10V
C976
P@0.47U/10V
C977
P@0.47U/10V
C978
P@0.47U/10V
(26) PR_MIC_IN#
Q44
P@DTC144EU
PR_MIC_IN_R
R588
P@100K-0402
C981
EMI
P@100P-0402
5VSUS
C979
P@22U/16V-1206
C980
P@.1U-0402
U53
GND
IN
EN1#
EN2#
OC1#
OUT1
OUT2
OC2#
P@TPS2062ADR
PR_USBPWR6
PR_USBPWR7
R567
R568
P@10K
-USBOC6 (7)
-USBOC7 (7)
C984
C985
P@22U/16V-1206
C982
P@.1U-0402
C983
P@.1U-0402
PROJECT : ZI5
Quanta Computer Inc.
Size
Custom
Document Number
EZ port
Rev
3C
Date: Tuesday, September 14, 2004
Sheet 33 of 33